SECTION SRS

SUPPLEMENTAL RESTRAINT SYSTEM (SRS)

CONTENTS

PRECAUTIONS 3
Precautions for Supplemental Restraint System (SRS) “AIR BAG” and “SEAT BELT PRE-TENSIONER” 3
Precautions for SRS “AIR BAG” and “SEAT BELT PRE-TENSIONER” Service 3
Occupant Classification System Precaution 3
PREPARATION 4
Commercial Service Tools 4
SUPPLEMENTAL RESTRAINT SYSTEM (SRS) 5
SRS Configuration 5
Front Seat Belt Pre-Tensioner with Load Limiter 6
Front Side Air Bag 6
Side Curtain Air Bag 6
Occupant Classification System (OCS) 7
Passenger Air Bag Status Condition 7
Component Parts of Occupant Classification System 7
Passenger Seatbelt Warning System 8
SYSTEM DESCRIPTION 8
TROUBLE DIAGNOSIS 9
Trouble Diagnosis Introduction 9
DIAGNOSIS FUNCTION 9
HOW TO PERFORM TROUBLE DIAGNOSIS FOR QUICK AND ACCURATE REPAIR 9
WORK FLOW 10
Component Parts Location 11
Schematic 12
Wiring Diagram — SRS — 13
CONSULT-II Function 19
DIAGNOSIS MODE FOR CONSULT-II 19
HOW TO CHANGE SELF-DIAGNOSIS MODE WITH CONSULT-II 19
HOW TO ERASE SELF-DIAGNOSTIC RESULTS 20
Self-Diagnosis Function (Without CONSULT-II) 20
HOW TO CHANGE SELF-DIAGNOSIS MODE WITHOUT CONSULT-LL 20
HOW TO ERASE SELF-DIAGNOSTIC RESULTS 20
SRS Operation Check 21
DIAGNOSTIC PROCEDURE 1 21
Trouble Diagnosis with CONSULT-II 23
DIAGNOSTIC PROCEDURE 2 23
DIAGNOSTIC PROCEDURE 3 28
DIAGNOSTIC PROCEDURE 4 (CONTINUED FROM DIAGNOSTIC PROCEDURE 2) 30
DIAGNOSTIC PROCEDURE 5 30
Trouble Diagnosis without CONSULT-II 36
DIAGNOSTIC PROCEDURE 6 36
WARNING LAMP FLASH CODE CHART 36
Trouble Diagnosis: “AIR BAG” Warning Lamp Does Not Turn OFF 40
DIAGNOSTIC PROCEDURE 7 40
Trouble Diagnosis: “AIR BAG” Warning Lamp Does Not Turn ON 41
DIAGNOSTIC PROCEDURE 8 41
Trouble Diagnosis: Passenger Seatbelt Warning System 42
DRIVER AIR BAG MODULE 43
Removal and Installation 43
REMOVAL 43
INSTALLATION 44
SPIRAL CABLE 45
Removal and Installation 45
REMOVAL 45
INSTALLATION 45
FRONT PASSENGER AIR BAG MODULE 47
Removal and Installation 47
REMOVAL 47
INSTALLATION 48
SIDE CURTAIN AIR BAG MODULE 49
Removal and Installation 49
REMOVAL 49
INSTALLATION 50
CRASH ZONE SENSOR 51
Removal and Installation 51
REMOVAL 51
INSTALLATION 51

A B C D E F G SRS I J K L M

nasicoelec.ir

SIDE AIR BAG (SATELLITE) SENSOR 52
Removal and Installation 52
REMOVAL 52
INSTALLATION 52
FRONT SEAT BELT PRE-TENSIONER 53
Removal and Installation 53
DIAGNOSIS SENSOR UNIT 54
Removal and Installation 54
REMOVAL 54
INSTALLATION 54
ECU DISCRIMINATED NO. 54
OCCUPANT CLASSIFICATION SYSTEM CONTROL UNIT 55
Removal and Installation 55
COLLISION DIAGNOSIS 56
For Frontal Collision 56
SRS INSPECTION (FOR FRONTAL COLLISION) 56
For Side Collision 58
WHEN THE SIDE AIR BAG IS ACTIVATED IN THE SIDE COLLISION: 58
WHEN SRS IS NOT ACTIVATED IN THE SIDE COLLISION: 58
SRS INSPECTION (FOR SIDE COLLISION) 58

nasicoelec.ir

PRECAUTIONS

PFP:00001

Precautions for Supplemental Restraint System (SRS) “AIR BAG” and “SEAT BELT PRE-TENSIONER”

NHS00055

The Supplemental Restraint System such as “AIR BAG” and “SEAT BELT PRE-TENSIONER”, used along with a front seat belt, helps to reduce the risk or severity of injury to the driver and front passenger for certain types of collision. This system includes seat belt switch inputs and dual stage front air bag modules. The SRS system uses the seat belt switches to determine the front air bag deployment, and may only deploy one front air bag, depending on the severity of a collision and whether the front occupants are belted or unbelted.
Information necessary to service the system safely is included in the SRS and SB section of this Service Manual.

WARNING:

- **To avoid rendering the SRS inoperative, which could increase the risk of personal injury or death in the event of a collision which would result in air bag inflation, all maintenance must be performed by an authorized NISSAN/INFINITI dealer.**
- **Improper maintenance, including incorrect removal and installation of the SRS, can lead to personal injury caused by unintentional activation of the system. For removal of Spiral Cable and Air Bag Module, see the SRS section.**
- **Do not use electrical test equipment on any circuit related to the SRS unless instructed to in this Service Manual. SRS wiring harnesses can be identified by yellow and/or orange harnesses or harness connectors.**

Precautions for SRS “AIR BAG” and “SEAT BELT PRE-TENSIONER” Service

NHS00056

- Do not use electrical test equipment to check SRS circuits unless instructed to in this Service Manual.
- Before servicing the SRS, turn ignition switch OFF, disconnect both battery cables and wait at least 3 minutes.
  For approximately 3 minutes after the cables are removed, it is still possible for the air bag and seat belt pre-tensioner to deploy. Therefore, do not work on any SRS connectors or wires until at least 3 minutes have passed.
- Diagnosis sensor unit must always be installed with their arrow marks “⇐” pointing towards the front of the vehicle for proper operation. Also check diagnosis sensor unit for cracks, deformities or rust before installation and replace as required.
- The spiral cable must be aligned with the neutral position since its rotations are limited. Do not turn steering wheel and column after removal of steering gear.
- Handle air bag module carefully. Always place driver and front passenger air bag modules with the pad side facing upward and seat mounted front side air bag module standing with the stud bolt side facing down.
- Conduct self-diagnosis to check entire SRS for proper function after replacing any components.
- After air bag inflates, the front instrument panel assembly should be replaced if damaged.
- Always replace instrument panel pad following front passenger air bag deployment.

Occupant Classification System Precaution

NHS0006R

Replace occupant classification system control unit and passenger front seat cushion as an assembly. Refer to SE-101, "FRONT SEAT" .

Pasicoelec.ir

PREPARATION

PFP:00002

Commercial Service Tools

NHS00059

Tool name	Description
Tamper resistant TORX bit 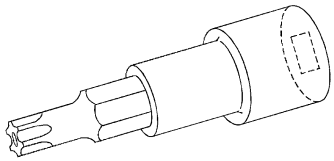 S-NT757	Size: T30

nasicoelec.ir

SUPPLEMENTAL RESTRAINT SYSTEM (SRS)

PFP:28556

SRS Configuration

NHS0005A

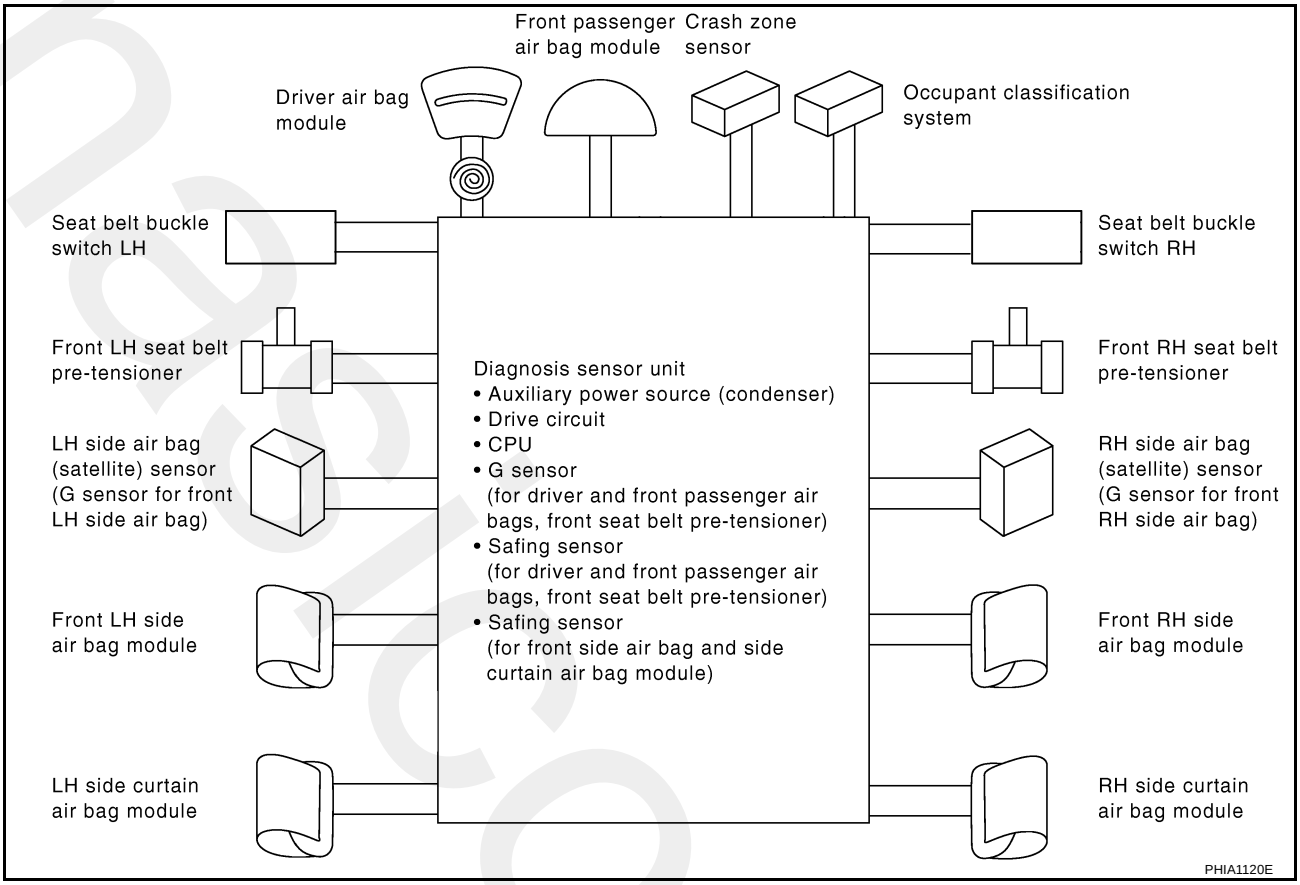

The air bag deploys if the diagnosis sensor unit activates while the ignition switch is in the ON or START position.
The collision modes for which supplemental restraint systems are activated are different among the SRS systems. For example, the driver air bag module and front passenger air bag module are activated in a frontal collision but not in a side collision.
SRS configurations which are activated for some collision modes are as follows;

SRS configuration	Frontal collision	Left side collision	Right side collision
Driver air bag module	×	—	—
Front passenger air bag module	×	—	—
Front LH seat belt pre-tensioner	×	—	—
Front RH seat belt pre-tensioner	×	—	—
Front LH side air bag module	—	×	—
Front RH side air bag module	—	—	×
LH side curtain air bag module	—	×	—
RH side curtain air bag module	—	—	×

Front Seat Belt Pre-Tensioner with Load Limiter

NHS0005B

The seat belt pre-tensioner system with load limiter is installed for both the driver's seat and the front passenger's seat. It operates simultaneously with the SRS air bag system in the event of a frontal collision with an impact exceeding a specified level.
When the frontal collision with an impact exceeding a specified level occurs, seat belt slack resulting from clothing or other factors is immediately taken up by the pre-tensioner. Vehicle passengers are securely restrained.
When passengers in a vehicle are thrown forward in a collision and the restraining force of the seat belt exceeds a specified level, the load limiter permits the specified extension of the seat belt by the twisting of the ELR shaft, and a relaxation of the chest-area seat belt web tension while maintaining force.

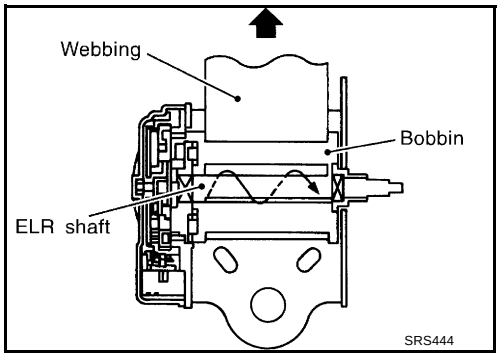

Front Side Air Bag

NHS0005C

Front side air bag is built-in type.
The front seatbacks with built-in type side air bag have the labels as shown.

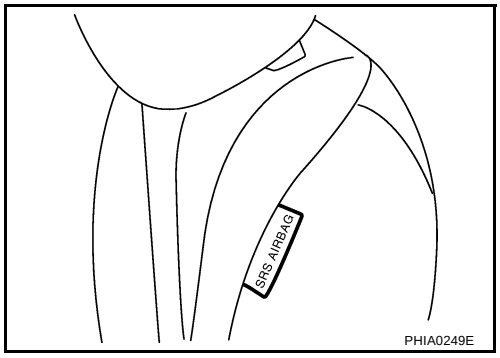

Side Curtain Air Bag

NHS0005D

The side curtain air bags have the labels as shown.

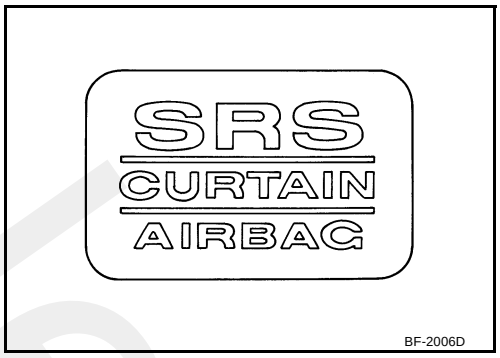

Occupant Classification System (OCS)

NHS00065

The occupant classification system identifies different size occupants, out of position occupants, and detects if child seat is present in the front passenger seat. The occupant classification system receives inputs from the occupant classification sensor (located inside the passenger seat cushion assembly) and belt tension sensor (part of the passenger front seat belt assembly and located at the belt anchor location). Depending on classification of passenger, the occupant classification system sends a signal to the diagnosis sensor unit. The diagnosis sensor unit uses this signal to determine full, partial, or non deployment of passenger front air bag in the event of a collision. Depending on the signal received, the diagnosis sensor unit can disable the passenger front air bag completely.

NOTE:
In case of customer concern, CONSULT-ll can be used to confirm the passenger air bag status (readiness).

Passenger Air Bag Status Condition

NHS00066

Front Passenger Seat (Condition)	PASS AIR BAG OFF Indicator (Status)	Passenger Air Bag Status (Readiness)	CONSULT-ll Display
Seat occupied	OFF	Active (enabled)	ON
seat occupiedNOTE	ON	Deactivated (disabled)	OFF
Seat empty	OFF	Deactivated (disabled)	OFF

NOTE:
Passenger does not meet Ocuupant classification System specifications for passenger air bag activation.

Component Parts of Occupant Classification System

NHS0006E

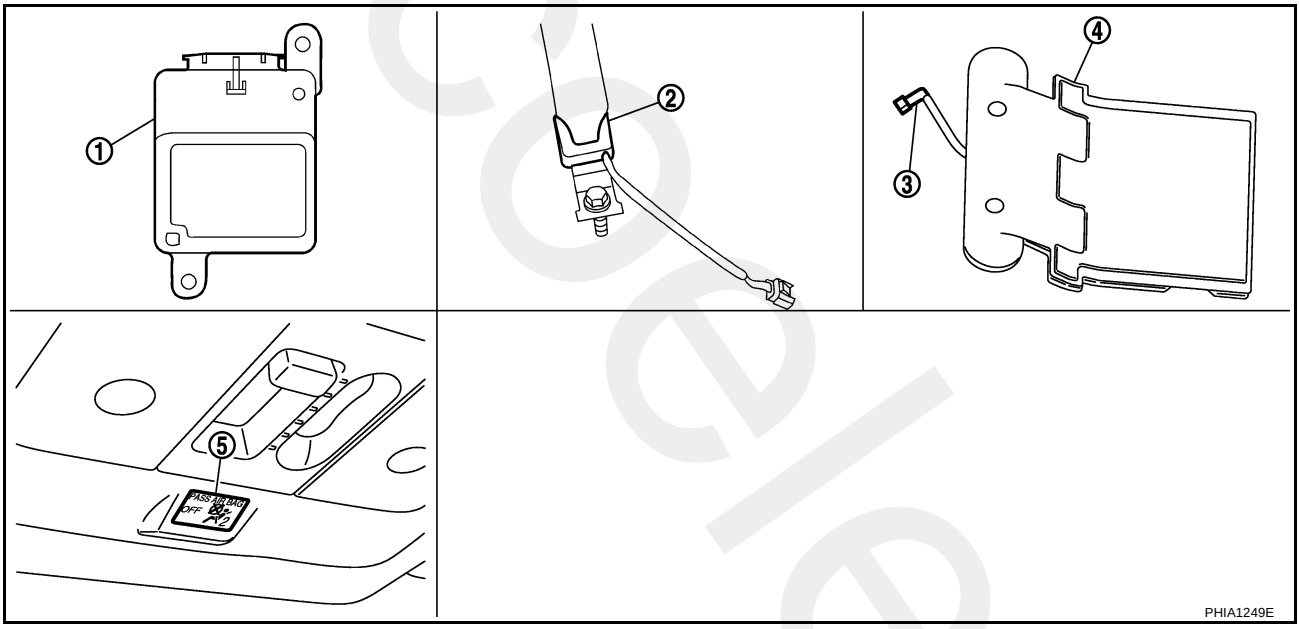

1. Occupant classification system control unit
2. Belt tension sensor
3. Occupant classification system sensor
4. Bladder
5. Front passenger air bag OFF indicator (Cutoff telltaile)

Passenger Seatbelt Warning System

NHS0009Z

SYSTEM DESCRIPTION

This system warns when passenger seatbelt is not fasten.

This system is composed of the following items.

- Seatbelt warning lamp.
- Seatbelt buckle switch (passenger side).
- Air bag diagnosis sensor unit.
- Occupant classification system.

Seatbelt warning lamp is used for both driver seatbelt warning and passenger seatbelt warning.
Seatbelt warning lamp turns ON when all conditions below are met.

- Driver seatbelt is fastened.
- Occupant is on passenger seat.
- Passenger seatbelt is not fasten.

Pasicoelec.ir

TROUBLE DIAGNOSIS

PFP:00004

Trouble Diagnosis Introduction

NHS0005E

CAUTION:

- **Do not use electrical test equipment on any circuit related to the SRS unless instructed in this Service Manual. SRS wiring harnesses can be identified by yellow and/or orange harnesses or harness connectors.**
- **Do not repair, splice or modify the SRS wiring harness. If the harness is damaged, replace it with a new one.**
- **Keep ground portion clean.**

DIAGNOSIS FUNCTION

The SRS self-diagnostic results can be read by using “AIR BAG” warning lamp and/or CONSULT-II.
The User mode is exclusively prepared for the customer (driver). This mode warns the driver of a system malfunction through the operation of the “AIR BAG” warning lamp.
The Diagnosis mode allows the technician to locate and inspect the malfunctioning part.
The mode applications for the “AIR BAG” warning lamp and CONSULT-II are as follows:

	User mode	Diagnosis mode	Display type
“AIR BAG” warning lamp	X	X	ON-OFF operation
CONSULT-II	—	X	Monitoring

HOW TO PERFORM TROUBLE DIAGNOSIS FOR QUICK AND ACCURATE REPAIR

A good understanding of the malfunction conditions can make troubleshooting faster and more accurate.
In general, each customer feels differently about a malfunction. It is important to fully understand the symptoms or conditions for a customer complaint.

Information from Customer

WHAT..... Vehicle model
WHEN..... Date, Frequencies
WHERE..... Road conditions
HOW..... Operating conditions, Symptoms

Preliminary Check

Make sure the following parts are in good order.

- Battery (Refer to SC-4, "How to Handle Battery" .)
- Fuse (Refer to SRS-13, "Wiring Diagram — SRS —" .)
- System component-to-harness connections

Repairelec.ir

WORK FLOW

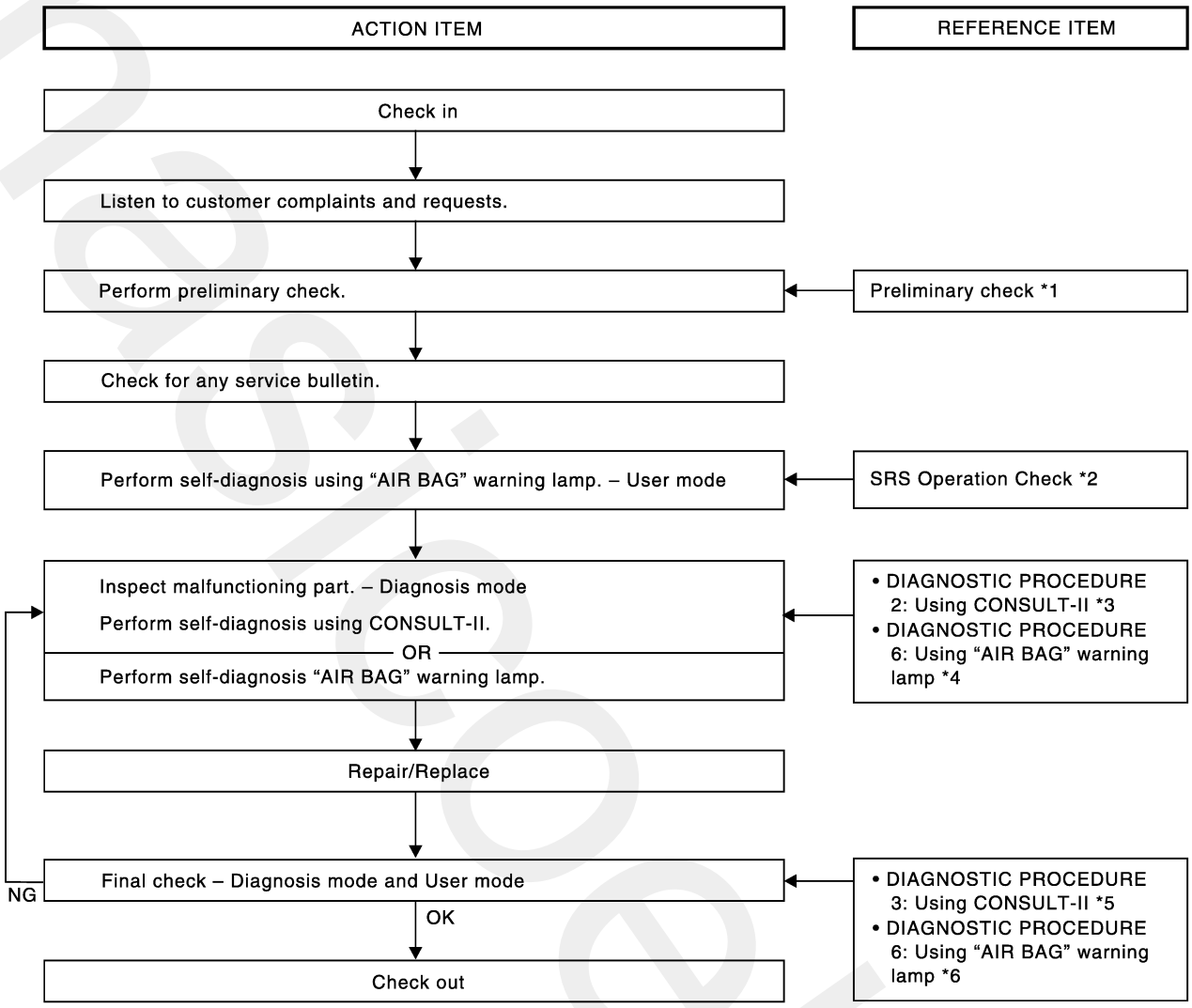

PHIA0217E

*1: SRS-9, "Preliminary Check".

*2: SRS-21, "SRS Operation Check".

*3: SRS-23, "DIAGNOSTIC PROCEDURE 2".

*4: SRS-36, "DIAGNOSTIC PROCEDURE 6".

*5: SRS-28, "DIAGNOSTIC PROCEDURE 3".

*6: SRS-36, "DIAGNOSTIC PROCEDURE 6".

pajoelec.ir

Component Parts Location

NHS0005F

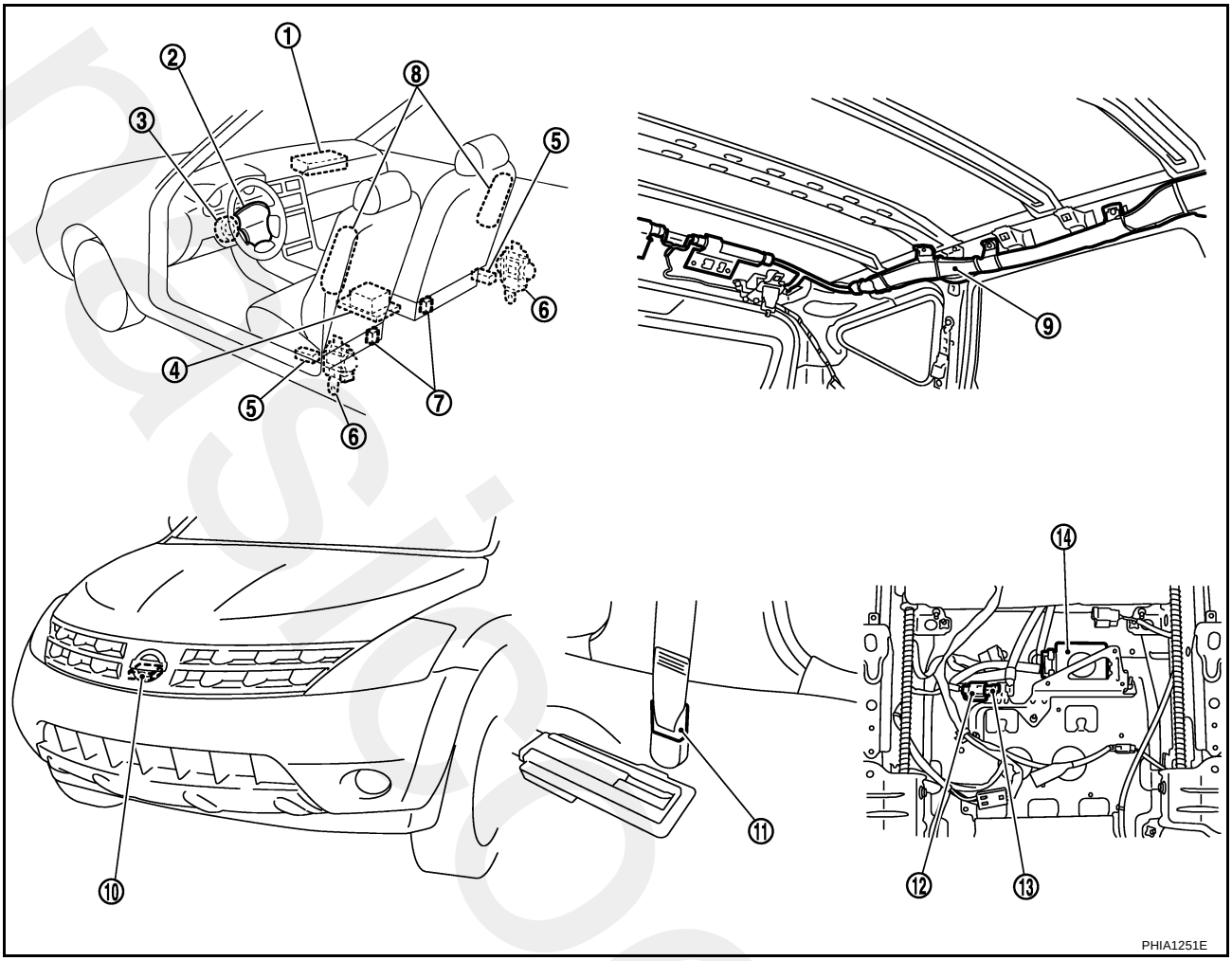

1. Front passenger air bag module
2. Driver air bag module
3. Spiral cable
4. Diagnosis sensor unit
5. Side air bag (Satellite) sensor (LH/RH)
6. Front seat belt pre-tensioner (LH/RH)
7. Seat belt buckle switch (LH/RH)
8. Front side air bag module (LH/RH)
9. Side curtain air bag module
10. Crash zone sensor
11. Belt tension sensor
12. Belt tension sensor connector *
13. Occupant classification system sensor *
14. Occupant classification system control unit *

*: The bottom of front passenger seat

A
B
C
D
E
F
G
SRS
I
J
K
L
M

nissanelec.ir

Schematic

NHS0005G

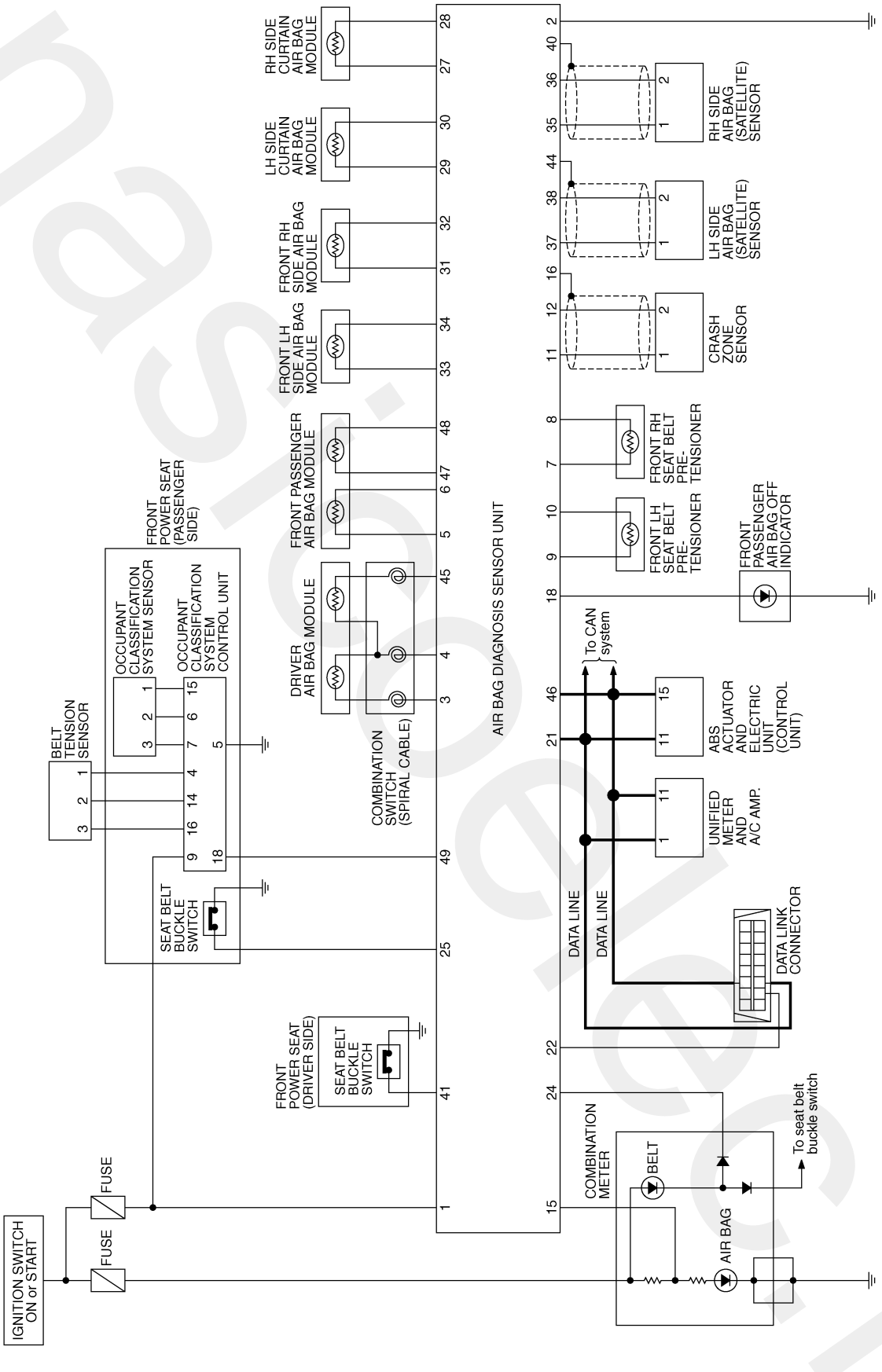

Wiring Diagram — SRS —

NHS0005H

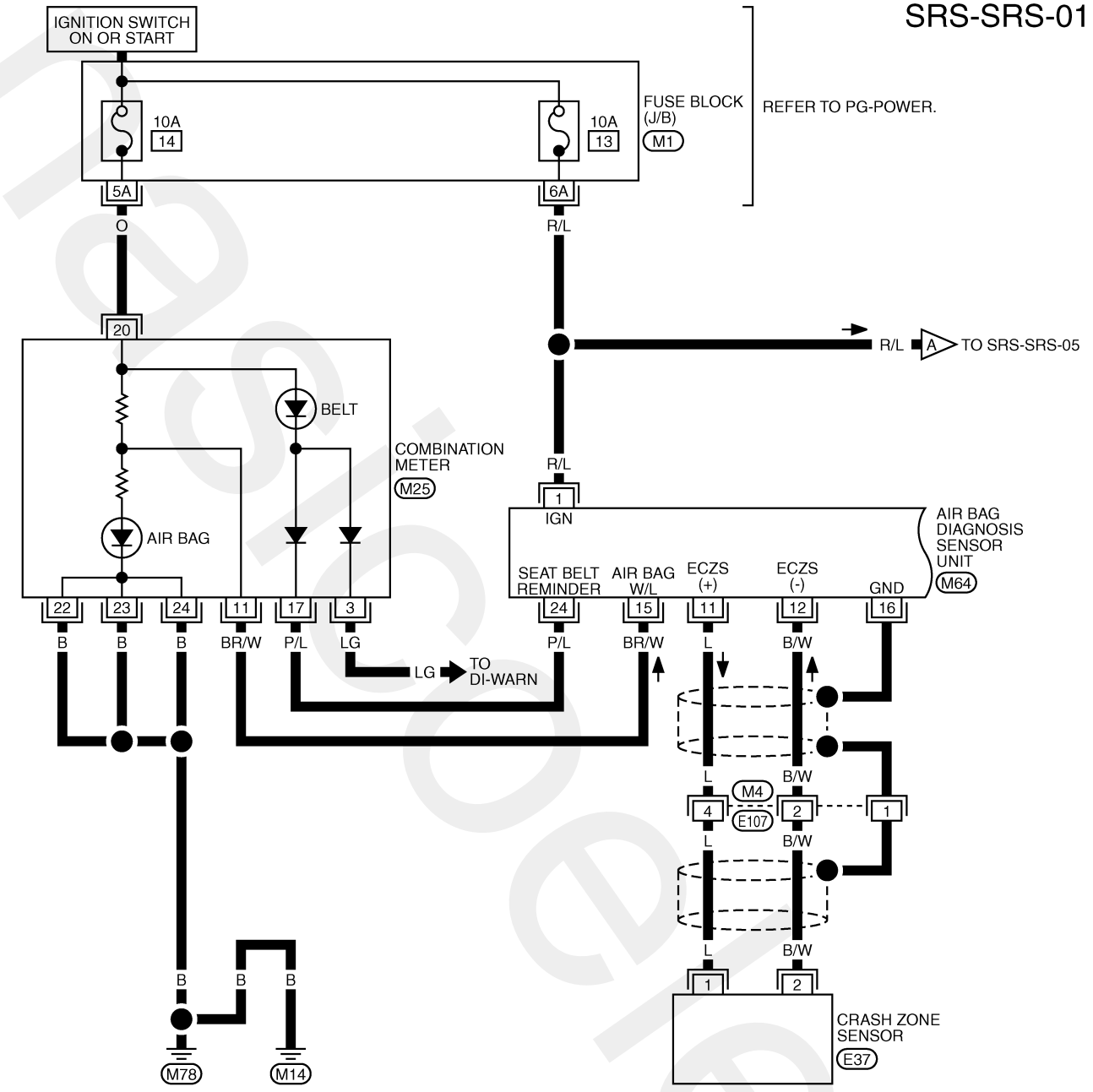

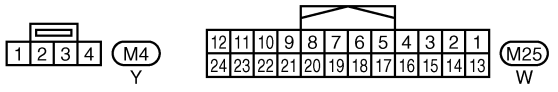

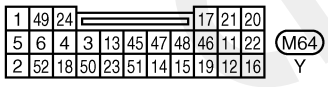

REFER TO THE FOLLOWING.
M1 -FUSE BLOCK-JUNCTION BOX (J/B)

THWM0276E

SRS-SRS-02

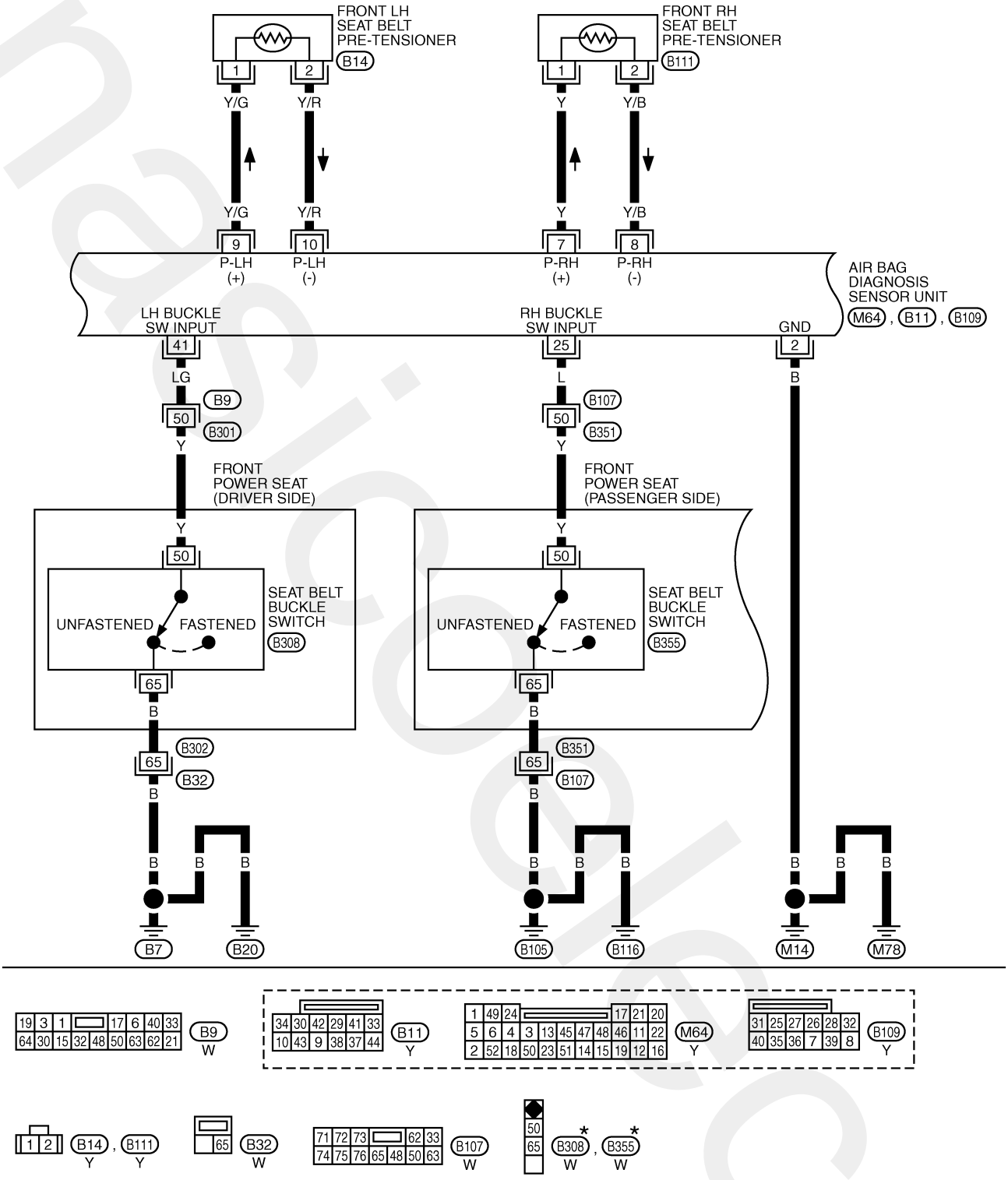

*: THIS CONNECTOR IS NOT SHOWN IN "HARNESS LAYOUT", PG SECTION.

THWB0053E

SRS-SRS-03

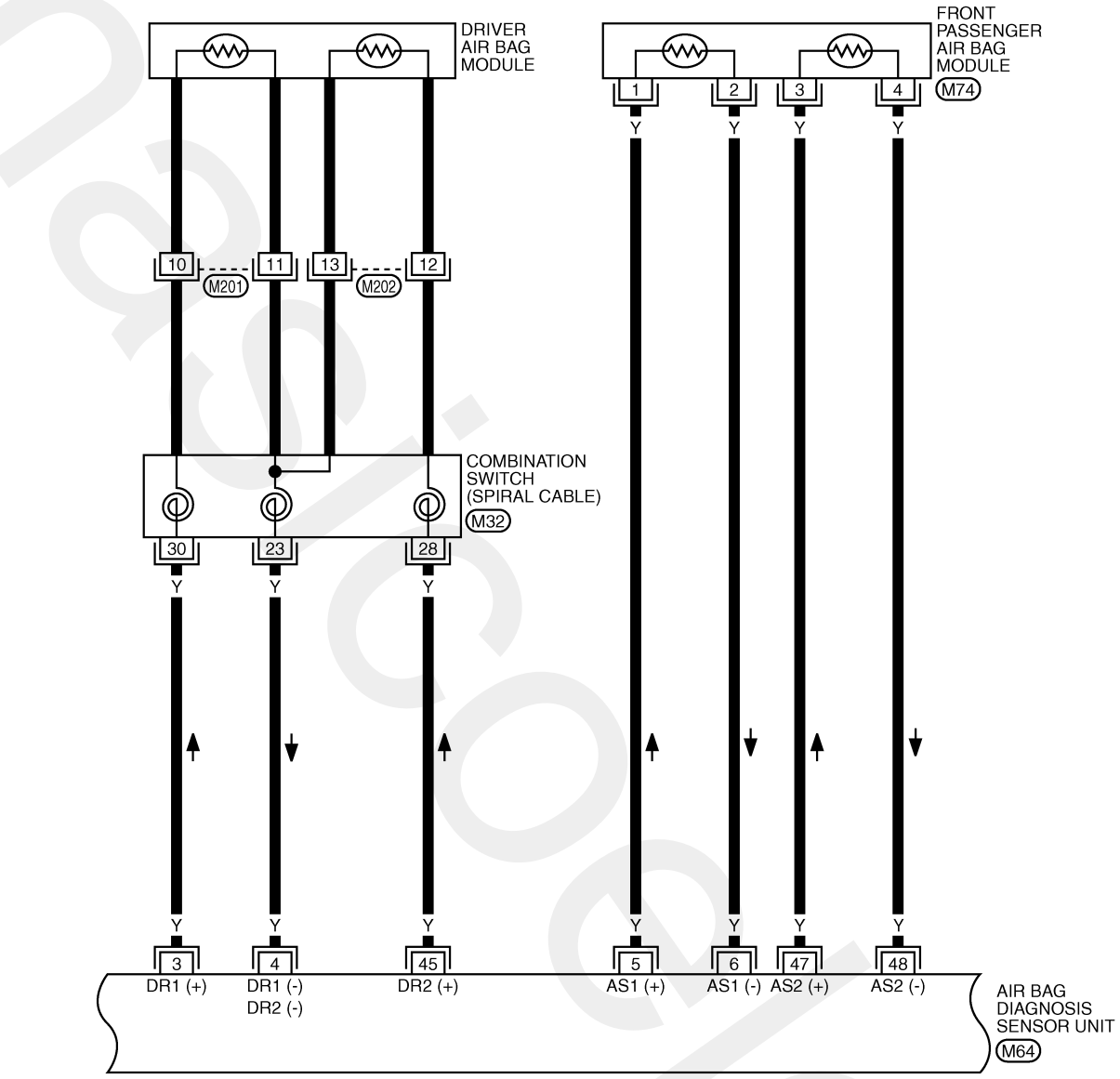

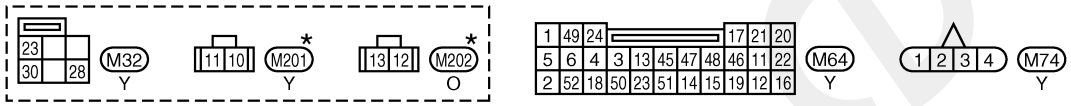

*: THIS CONNECTOR IS NOT SHOWN IN "HARNESS LAYOUT", PG SECTION.

THWB0026E

SRS-SRS-04

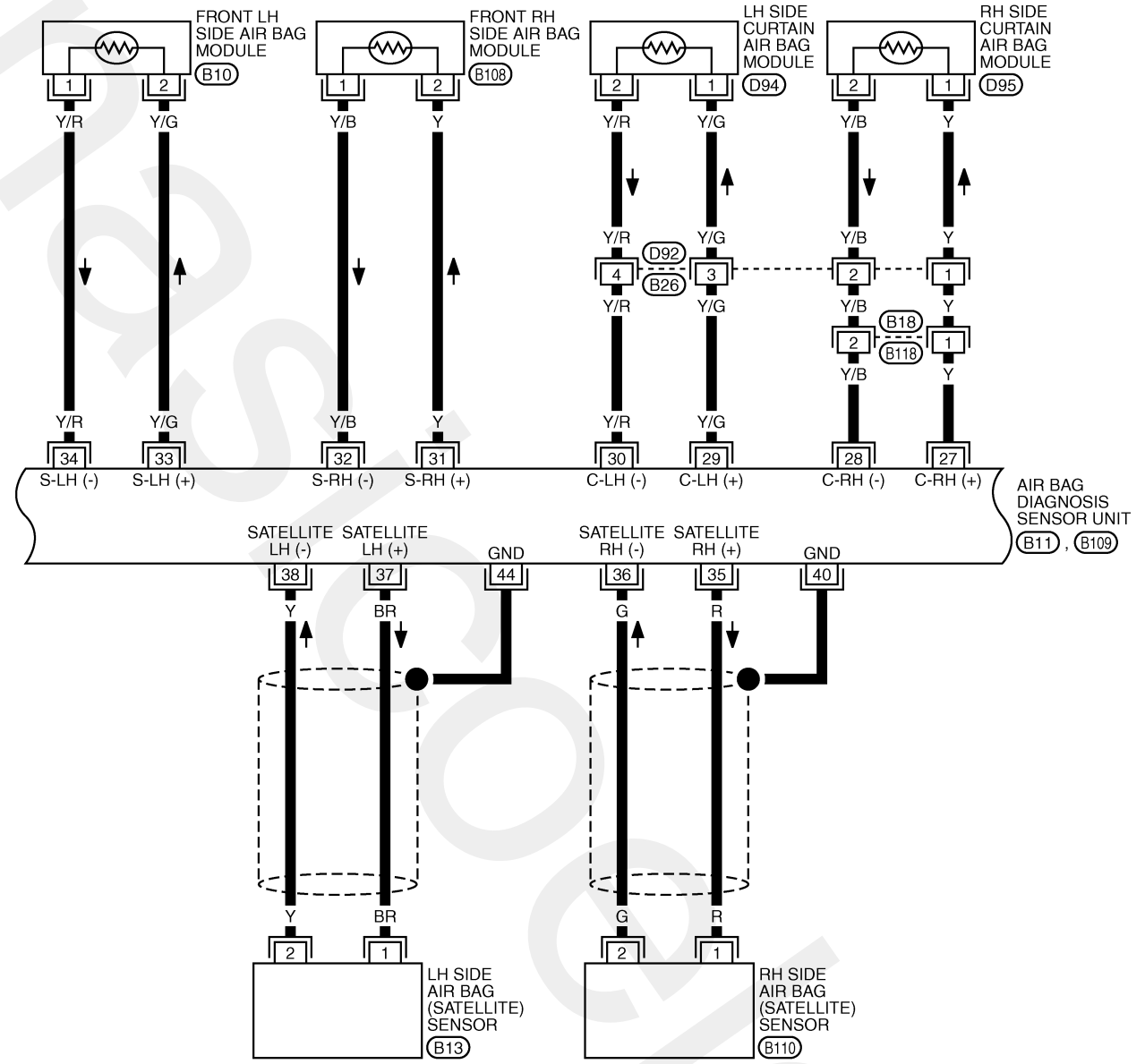

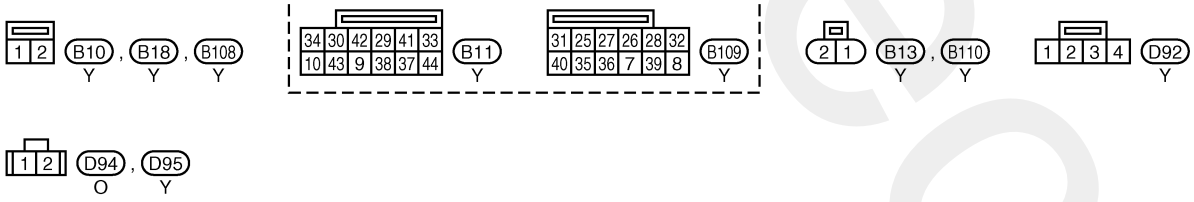

THWB0054E

SRS-SRS-05

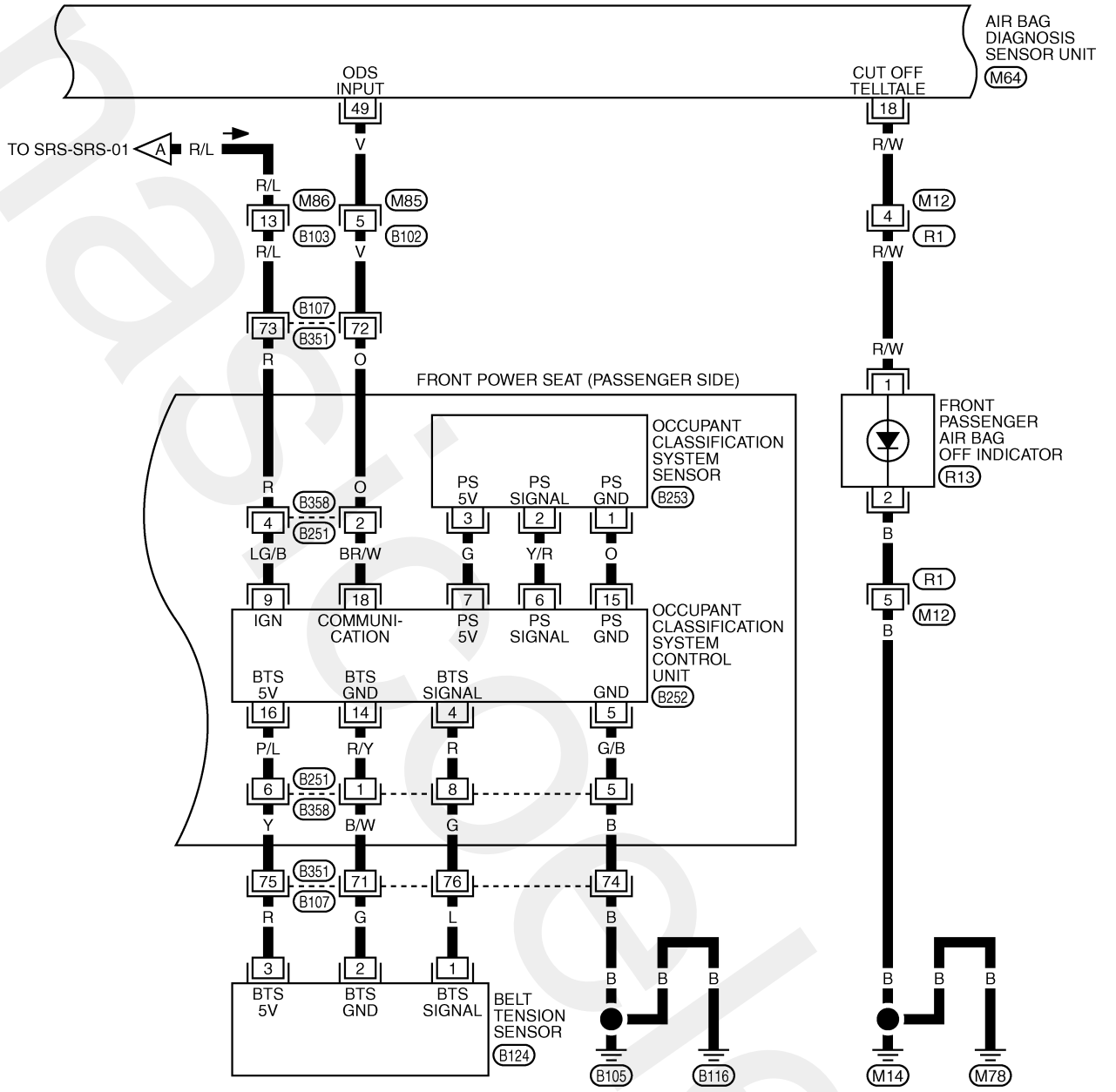

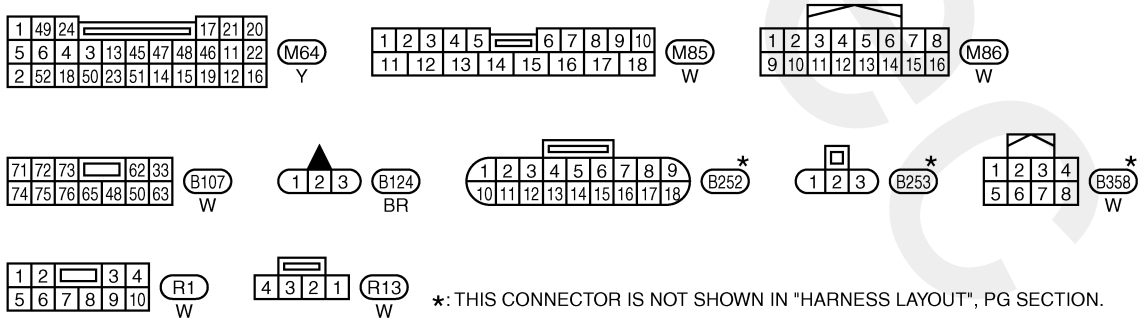

THWM0277E

SRS-SRS-06

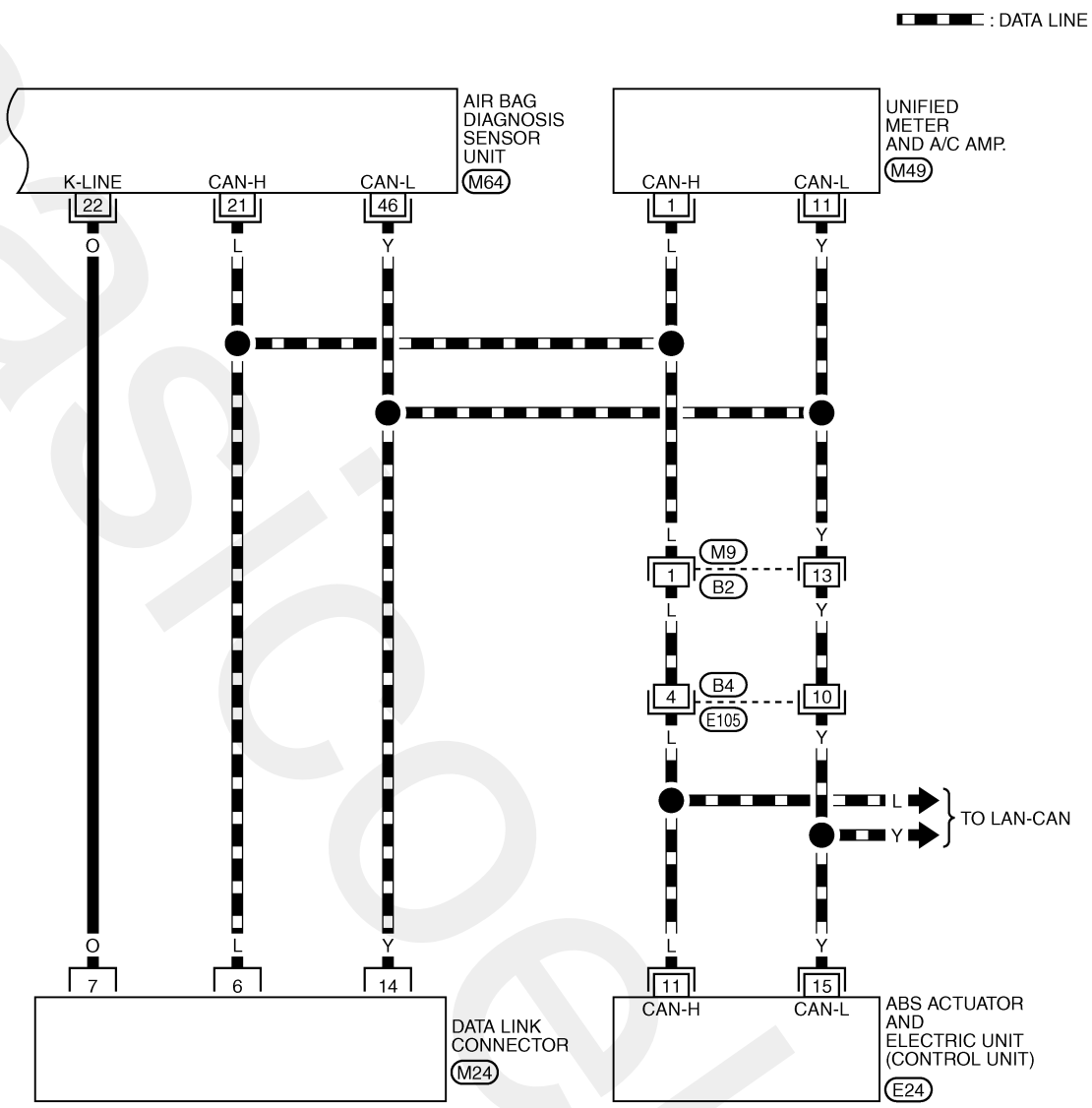

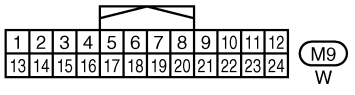

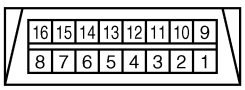

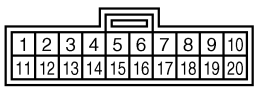

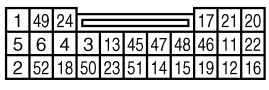

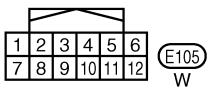

REFER TO THE FOLLOWING.
E24 -ELECTRICAL UNITS

THWM0278E

CONSULT-II Function

NHS0005I

DIAGNOSIS MODE FOR CONSULT-II

- “SELF-DIAG [CURRENT]”
  A current self-diagnostic results (also indicated by the number of warning lamp flashes in the Diagnosis mode) is displayed on the CONSULT-II screen in real time. This refers to a malfunctioning part requiring repairs.
- “SELF-DIAG [PAST]”
  Diagnosis results previously stored in the memory are displayed on the CONSULT-II screen. The stored results are not erased until memory erasing is executed.
- “TROUBLE DIAG RECORD”
  With TROUBLE DIAG RECORD, diagnosis results previously erased by a reset operation can be displayed on the CONSULT-II screen.
- “ECU DISCRIMINATED NO.”
  The diagnosis sensor unit for each vehicle model is assigned with its own, individual classification number. This number will be displayed on the CONSULT-II screen, as shown. When replacing the diagnosis sensor unit, refer to the part number for the compatibility. After installation, replacement with a correct unit can be checked by confirming this classification number on the CONSULT-II screen.
  After repair, make sure the discriminated number of diagnosis sensor unit installed to vehicle are same. Refer to SRS-54, "ECU DISCRIMINATED NO." .

Example

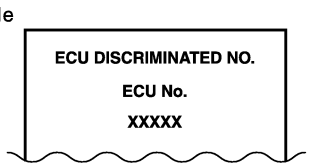

PHIA0218E

- PASSENGER AIR BAG
  The STATUS (readiness) of the front passenger air bag module is displayed. The STATUS displayed (ON/OFF) depends on the signals supplied to the occupant classification system control module and air bag diagnosis sensor unit. Refer to SRS-7, "Occupant Classification System (OCS)" for more information.

HOW TO CHANGE SELF-DIAGNOSIS MODE WITH CONSULT-II

From User Mode to Diagnosis Mode

After selecting “AIR BAG” on the “SELECT SYSTEM” screen, User mode automatically changes to Diagnosis mode.

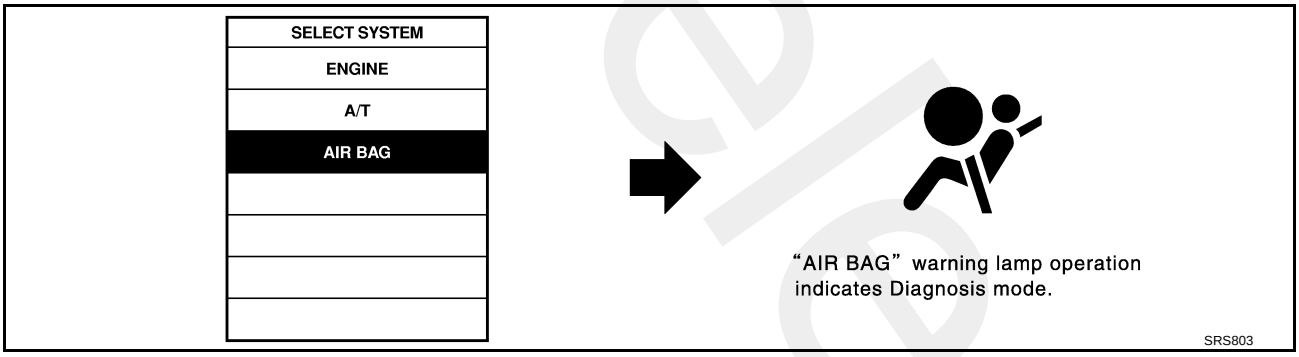

SRS803

From Diagnosis Mode to User Mode

To return to User mode from Diagnosis mode, touch “BACK” key of CONSULT-II until “SELECT SYSTEM” appears, Diagnosis mode automatically changes to User mode.

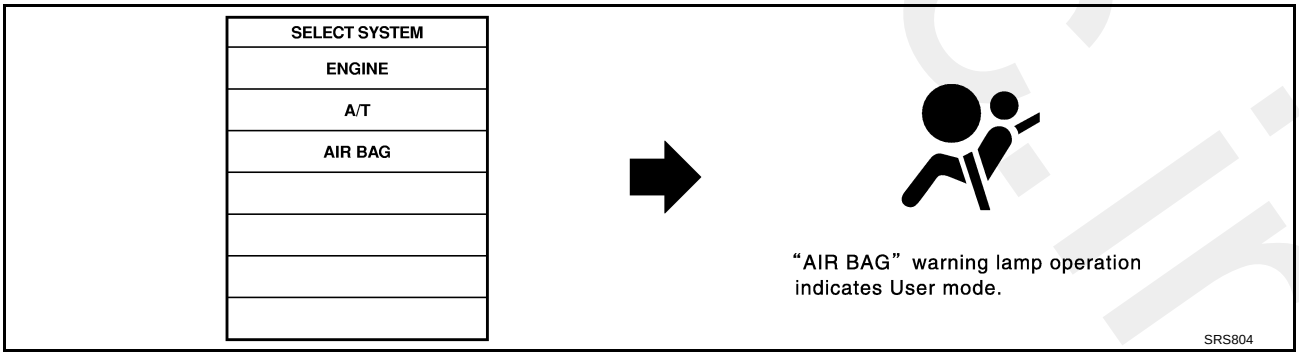

SRS804

HOW TO ERASE SELF-DIAGNOSTIC RESULTS

- "SELF-DIAG [CURRENT]"
  A current self-diagnostic result is displayed on the CONSULT-II screen in real time.
  After the malfunction is repaired completely, no malfunction is detected on "SELF-DIAG [CURRENT]".
- "SELF-DIAG [PAST]"
  Return to the "SELF-DIAG [CURRENT]" CONSULT-II screen by touching "BACK" key of CONSULT-II and select "SELF-DIAG [CURRENT]" in SELECT DIAG MODE. Touch "ERASE" in "SELF-DIAG [CURRENT]" mode.

  NOTE:
  If the memory of the malfunction in "SELF-DIAG [PAST]" is not erased, the User mode shows the system malfunction by the operation of the warning lamp even if the malfunction is repaired completely.
- "TROUBLE DIAG RECORD"
  The memory of "TROUBLE DIAG RECORD" cannot be erased.

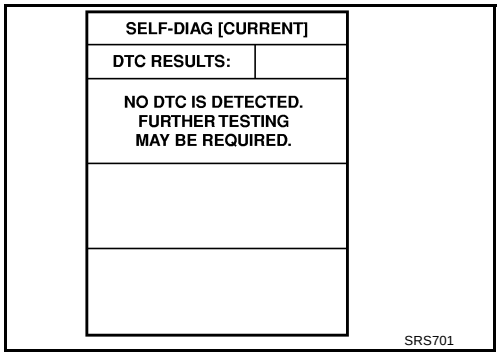

Self-Diagnosis Function (Without CONSULT-II)

NHS0005J

- The reading of these results is accomplished "User mode" and "Diagnosis mode".
- After a malfunction is repaired, turn ignition switch ON. Diagnosis mode returns to the User mode. At that time, the self-diagnostic result is cleared.

HOW TO CHANGE SELF-DIAGNOSIS MODE WITHOUT CONSULT-LL

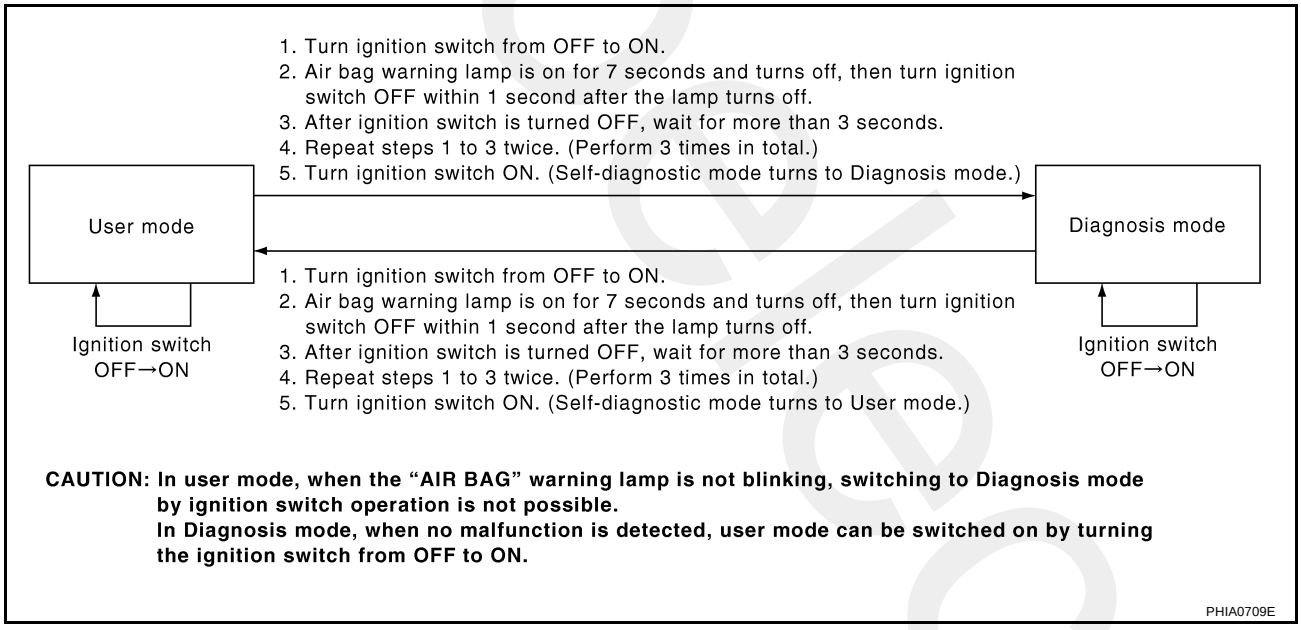

HOW TO ERASE SELF-DIAGNOSTIC RESULTS

After a malfunction is repaired, turn the ignition switch OFF for at least one second, then back ON. Diagnosis mode returns to the User mode. At that time, the self-diagnostic result is cleared.

SRS Operation Check

NHS0005K

DIAGNOSTIC PROCEDURE 1

Checking Air Bag Operation by Using “AIR BAG” Warning Lamp — User Mode

1. Turn the ignition switch from OFF to ON, and make sure the air bag warning lamp blinks.
2. Compare the SRS air bag warning lamp blinking pattern with the examples.

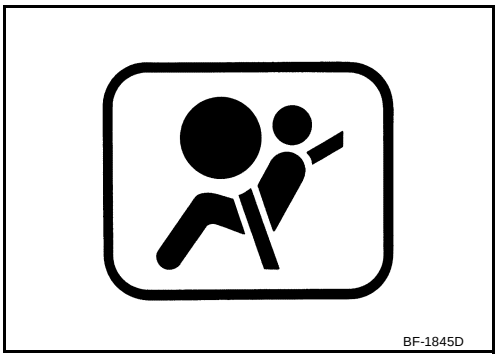

nasicoelec.ir

Warning lamp examples

“AIR BAG” warning lamp operation — User mode	SRS condition	Reference item
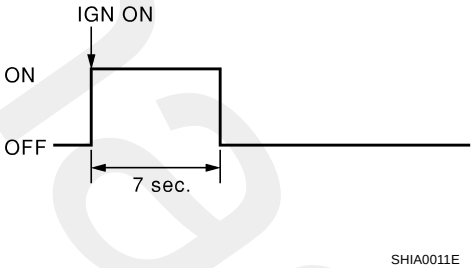 SHIA0011E	● No malfunction is detected. ● No further action is necessary.	—
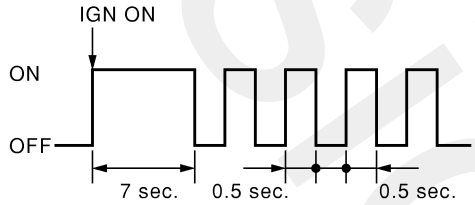 SHIA0012E	● The system is malfunctioning and needs to be repaired as indicated.	Go to SRS-23, "DIAGNOSTIC PROCEDURE 2" or SRS-30, "DIAGNOSTIC PROCEDURE 5" .
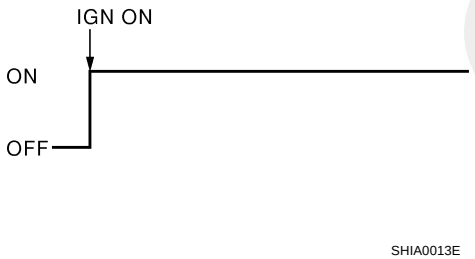 SHIA0013E	● Air bag is deployed. ● Seat belt pre-tensioner is deployed.	Go to SRS-56, "COLLISION DIAGNOSIS" .
	● Diagnosis sensor unit is malfunctioning. ● Air bag power supply circuit is malfunctioning. ● SRS air bag warning lamp circuit is malfunctioning.	Go to SRS-40, "Trouble Diagnosis: “AIR BAG” Warning Lamp Does Not Turn OFF" .
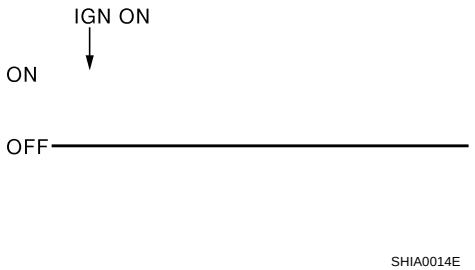 SHIA0014E	● Diagnosis sensor unit is malfunctioning. ● Air bag warning lamp circuit is malfunctioning.	Go to SRS-41, "Trouble Diagnosis: “AIR BAG” Warning Lamp Does Not Turn ON" .

Trouble Diagnosis with CONSULT-II

NHS0005L

DIAGNOSTIC PROCEDURE 2

Refer to GI-37, "CONSULT-II Start Procedure" .

CAUTION:

If CONSULT-II is used with no connection of CONSULT-II CONVERTER, malfunctions might be detected in self-diagnosis depending on control unit which carry out CAN communication.

1. Touch “SELF-DIAG [CURRENT]”.

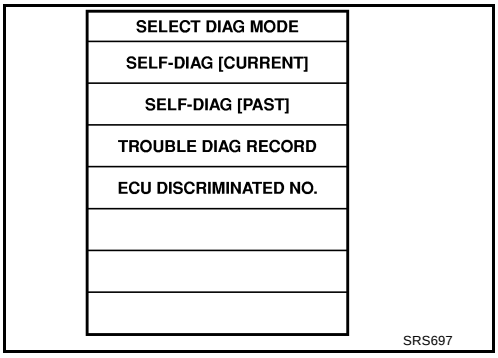

2. Diagnostic code is displayed on “SELF-DIAG [CURRENT]”.

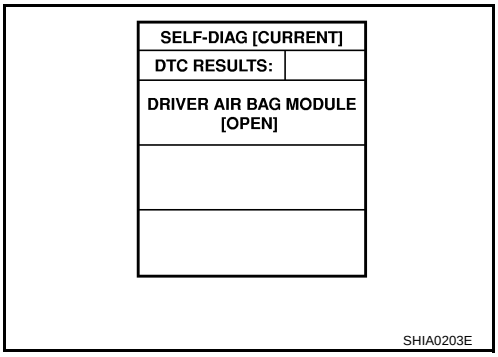

3. If no malfunction is detected on “SELF-DIAG [CURRENT]” even though malfunction is detected in “SRS Operation Check”, check the battery voltage. If the battery voltage is less than 9V, charge or replace the battery. Then go to SRS-28, "DIAGNOSTIC PROCEDURE 3" . If the battery voltage is OK, go to SRS-30, "DIAGNOSTIC PROCEDURE 4 (CONTINUED FROM DIAGNOSTIC PROCEDURE 2)" to diagnose the following cases:
   - Self-diagnostic result “SELF-DIAG [PAST]” (previously stored in the memory) might not be erased after repair.
   - The SRS system malfunctions intermittently.

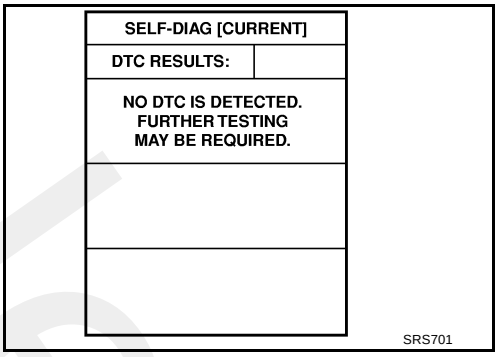

DTC No. Index (“SELF-DIAG [CURRENT]”)

Diagnostic item	Explanation		Repair order “Recheck SRS at each replacement”
NO DTC IS DETECTED.	When malfunction is indicated by the “AIR BAG” warning lamp in User mode.	● Low battery voltage (Less than 9V)	● Go to SRS-28, "DIAGNOSTIC PROCEDURE 3" after charging the battery.
		● Self-diagnostic result “SELF-DIAG [PAST]” (previously stored in the memory) might not be erased after repair. ● Intermittent malfunction has been detected in the past.	● Go to SRS-30, "DIAGNOSTIC PROCEDURE 4 (CONTINUED FROM DIAGNOSTIC PROCEDURE 2)" . ● Go to SRS-30, "DIAGNOSTIC PROCEDURE 5" .
	● No malfunction is detected.		—

Diagnostic item	Explanation	Repair order “Recheck SRS at each replacement”
DRIVER AIRBAG MODULE [OPEN] [B1054]	● Driver air bag module circuit is open (including the spiral cable).	1. Visually check the wiring harness connection. 2. Replace the harness if it has visible damage. 3. Replace the driver air bag module. 4. Replace the spiral cable. 5. Replace the diagnosis sensor unit. 6. Replace the related harness.
DRIVER AIRBAG MODULE [VB-SHORT] [B1055]	● Driver air bag module circuit is shorted to a power supply circuit (including the spiral cable).	
DRIVER AIRBAG MODULE [GND-SHORT] [B1056]	● Driver air bag module circuit is shorted to ground (including the spiral cable).	
DRIVER AIRBAG MODULE [SHORT] [B1057]	● Driver air bag module circuit is shorted between lines.	
ASSIST A/B MODULE [OPEN] [B1070]	● Front passenger air bag module circuit is open.	1. Visually check the wiring harness connection. 2. Replace the harness if it has visible damage. 3. Replace the front passenger air bag module. 4. Replace the diagnosis sensor unit. 5. Replace the related harness.
ASSIST A/B MODULE [VB-SHORT] [B1071]	● Front passenger air bag module circuit is shorted to a power supply circuit.	
ASSIST A/B MODULE [GND-SHORT] [B1072]	● Front passenger air bag module circuit is shorted to ground.	
ASSIST A/B MODULE [SHORT] [B1073]	● Front passenger air bag module circuit is shorted between lines.	
CRASH ZONE SEN [UNIT FAIL] [B1033] [B1034] CRASH ZONE SEN [COMM FAIL] [B1035] CRASH ZONE SEN [UNMATCH] [B1036]	● Crash zone sensor	1. Visually check the wiring harness connection. 2. Replace the harness if it has visible damage. 3. Replace the crash zone sensor. 4. Replace the diagnosis sensor unit. 5. Replace the related harness.
SIDE MODULE LH [OPEN] [B1134]	● Front LH side air bag module circuit is open.	1. Visually check the wiring harness connection. 2. Replace the harness if it has visible damage. 3. Replace the front LH setback assembly (front LH side air bag module). 4. Replace the diagnosis sensor unit. 5. Replace the related harness.
SIDE MODULE LH [VB-SHORT] [B1135]	● Front LH side air bag module circuit is shorted to a power supply circuit.	
SIDE MODULE LH [GND-SHORT] [B1136]	● Front LH side air bag module circuit is shorted to ground.	
SIDE MODULE LH [SHORT] [B1137]	● Front LH side air bag module circuit is shorted between lines.	

nasicoelec.ir

Diagnostic item	Explanation	Repair order "Recheck SRS at each replacement"
SIDE MODULE RH [OPEN] [B1129]	● Front RH side air bag module circuit is open.	1. Visually check the wiring harness connection. 2. Replace the harness if it has visible damage. 3. Replace the front RH setback assembly (front RH side air bag module). 4. Replace the diagnosis sensor unit. 5. Replace the related harness.
SIDE MODULE RH [VB-SHORT] [B1130]	● Front RH side air bag module circuit is shorted to a power supply circuit.	
SIDE MODULE RH [GND-SHORT] [B1131]	● Front RH side air bag module circuit is shorted to ground.	
SIDE MODULE RH [SHORT] [B1132]	● Front RH side air bag module circuit is shorted between lines.	
SATELLITE SENS LH [UNIT FAIL] [B1118] [B1119] SATELLITE SENS LH [COMM FAIL] [B1120] SATELLITE SENS LH [UNMATCH] [B1121]	● LH side air bag (Satellite) sensor	1. Visually check the wiring harness connection. 2. Replace the harness if it has visible damage. 3. Replace the LH side air bag (Satellite) sensor. 4. Replace the diagnosis sensor unit. 5. Replace the related harness.
SATELLITE SENS RH [UNIT FAIL] [B1113] [B1114] SATELLITE SENS RH [COMM FAIL] [B1115] SATELLITE SENS RH [UNMATH] [B1116]	● RH side air bag (Satellite) sensor	1. Visually check the wiring harness connection. 2. Replace the harness if it has visible damage. 3. Replace the RH side air bag (Satellite) sensor. 4. Replace the diagnosis sensor unit. 5. Replace the related harness.
PRE-TEN FRONT LH [OPEN] [B1086]	● Front LH pre-tensioner circuit is open.	1. Visually check the wiring harness connections. 2. Replace the harness if it has visible damage. 3. Replace the front LH seat belt. 4. Replace the diagnosis sensor unit. 5. Replace the related harness.
PRE-TEN FRONT LH [VB-SHORT] [B1087]	● Front LH pre-tensioner circuit is shorted to a power supply circuit.	
PRE-TEN FRONT LH [GND-SHORT] [B1088]	● Front LH pre-tensioner circuit is shorted to ground.	
PRE-TEN FRONT LH [SHORT] [B1089]	● Front LH pre-tensioner circuit is shorted between lines.	
PRE-TEN FRONT RH [OPEN] [B1081]	● Front RH pre-tensioner circuit is open.	1. Visually check the wiring harness connections. 2. Replace the harness if it has visible damage. 3. Replace the front RH seat belt. 4. Replace the diagnosis sensor unit. 5. Replace the related harness.
PRE-TEN FRONT RH [VB-SHORT] [B1082]	● Front RH pre-tensioner circuit is shorted to a power supply circuit.	
PRE-TEN FRONT RH [GND-SHORT] [B1083]	● Front RH pre-tensioner circuit is shorted to ground.	
PRE-TEN FRONT RH [SHORT] [B1084]	● Front RH pre-tensioner circuit is shorted between lines.	

Nissan Confidential

Diagnostic item	Explanation	Repair order "Recheck SRS at each replacement"
CURTAIN MODULE LH [OPEN] [B1150]	● LH side curtain air bag module circuit is open.	1. Visually check the wiring harness connection. 2. Replace the harness if it has visible damage. 3. Replace the LH side curtain air bag module. 4. Replace the diagnosis sensor unit. 5. Replace the related harness.
CURTAIN MODULE LH [VB-SHORT] [B1151]	● LH side curtain air bag module circuit is shorted to some power supply circuits.	
CURTAIN MODULE LH [GND-SHORT] [B1152]	● LH side curtain air bag module circuit is shorted to ground.	
CURTAIN MODULE LH [SHORT] [B1153]	● LH side curtain air bag module circuit is shorted between lines.	
CURTAIN MODULE RH [OPEN] [B1145]	● RH side curtain air bag module circuit is open.	1. Visually check the wiring harness connection. 2. Replace the harness if it has visible damage. 3. Replace the RH side curtain air bag module. 4. Replace the diagnosis sensor unit. 5. Replace the related harness.
CURTAIN MODULE RH [VB-SHORT] [B1146]	● RH side curtain air bag module circuit is shorted to a power supply circuit.	
CURTAIN MODULE RH [GND-SHORT] [B1147]	● RH side curtain air bag module circuit is shorted to ground.	
CURTAIN MODULE RH [SHORT] [B1148]	● RH side curtain air bag module circuit is shorted between lines.	
CONTROL UNIT [B1001-B1015] [B1026-B1031] [B1042-B1047] [B1058-B1063] [B1074-B1079] [B1106-B1111] [B1122-B1127] [B1138-B1143] [B1202-B1207]	● Diagnosis sensor unit is malfunctioning.	1. Visually check the wiring harness connection. 2. Replace the diagnosis sensor unit.
PASS A/B INDCTR CKT [B1023]	● Cutoff telltale circuit is open or shorted to grand or the circuits are shorted each other.	1. Visually check the wiring harness connection. 2. Replace the harness if it has visible damage. 3. Replace cutoff telltale. 4. Replace the diagnosis sensor unit.
OCCUPANT SENS C/U [UNIT FAIL] [B1017] [B1020] [B1021]	● Trouble occurs in Occupant Classification System-CU.	● Replace passenger side seat cushion assembly.
OCCUPANT SENS C/U [COMM FAIL] [B1022]	● Trouble occurs in Occupant Classification System-CU, circuit of Occupant Classification System-CU—Diagnosis Senser Unit, or Diagnosis Sensor Unit.	1. Visually check the wiring harness connection. 2. Replace the harness if it has visible damage. 3. Replace passenger side seat cushion assembly. 4. Replace the diagnosis sensor unit.
OCCUPANT SENS [UNIT FAIL] [B1018]	● Trouble occurs in Occupant Classification System-SENS.	● Replace passenger side seat cushion assembly.

Diagnostic item	Explanation	Repair order “Recheck SRS at each replacement”
BELT TENSION SENS [UNIT FAIL] [B1019]	● Trouble occurs in Belt Tension sensor (BTS), circuit of BTS—Occupant Classification System-CU, or Occupant Classification System-CU.	1. Visually check the wiring harness connection. 2. Replace the harness if it has visible damage. 3. Replace passenger side seat belt assembly. 4. Replace the diagnosis sensor unit.
FRONTAL COLLISION-DETECTION [B1209]	● Seat belt pre-tensioner and front air bag are deployed.	● Go to SRS-56, "For Frontal Collision" .
SIDE COLLISION DETECTION [B1210]	● Side and curtain air bag is deployed.	● Go to SRS-58, "For Side Collision" .

NOTE:
Follow the procedures in numerical order when repairing malfunctioning parts. Confirm whether malfunction is eliminated using air bag warning lamp or CONSULT-II each time repair is finished. If malfunction is still observed, proceed to the next step. When malfunction is eliminated, further repair work is not required.

nzelecoelec.ir

DIAGNOSTIC PROCEDURE 3

Final inspection after repairing SRS by using CONSULT-II — Diagnosis mode

Refer to GI-37, "CONSULT-II Start Procedure" .

CAUTION:

If CONSULT-II is used with no connection of CONSULT-II CONVERTER, malfunctions might be detected in self-diagnosis depending on control unit which carry out CAN communication.

1. Touch “SELF-DIAG [CURRENT]”.

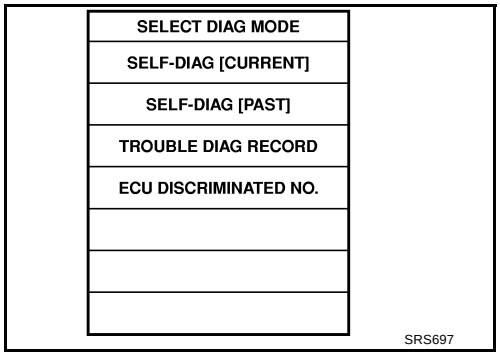

2. If no malfunction is detected on “SELF-DIAG [CURRENT]”, repair of SRS is completed. Go to step 3.
   If any malfunction is detected on “SELF-DIAG [CURRENT]”, the malfunctioning part is not repaired completely or another malfunctioning part is detected. Go to SRS-23, "DIAGNOSTIC PROCEDURE 2" , and repair malfunctioning part completely.

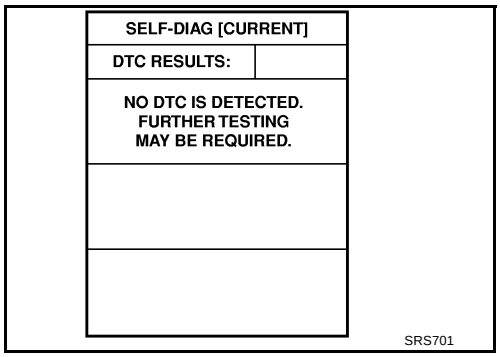

3. Touch “ERASE”.

   NOTE:
   Touch “ERASE” to clear the memory of the malfunction (“SELF-DIAG [PAST]”).
   If the memory of the malfunction in “SELF-DIAG [PAST]” is not erased, the User mode shows the system malfunction by the operation of the warning lamp even if the malfunction is repaired completely.

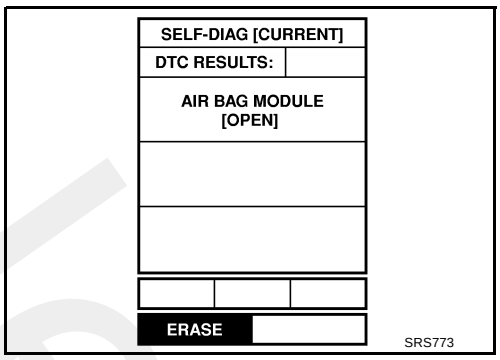

4. Touch “BACK” key of CONSULT-II to “SELECT DIAG MODE” screen. Touch “SELF-DIAG [PAST]”.

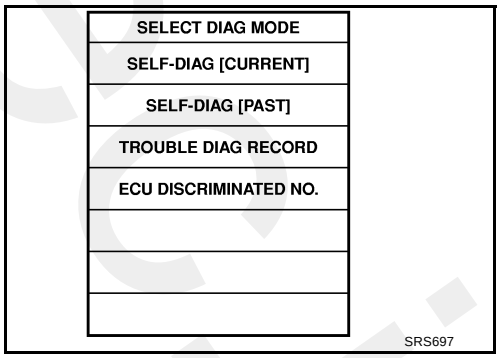

5. Make sure no malfunction is detected on “SELF-DIAG [PAST]”.
6. Touch “BACK” key of CONSULT-II until “SELECT SYSTEM” appears in order to return to User mode from Diagnosis mode.
7. Turn ignition switch OFF then turn off and disconnect CONSULT-II. Go to SRS-21, "Checking Air Bag Operation by Using “AIR BAG” Warning Lamp — User Mode" .

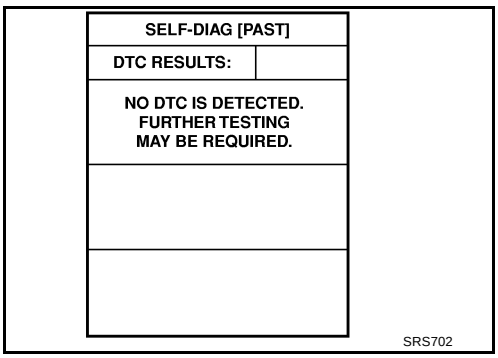

Masicoelec.ir

DIAGNOSTIC PROCEDURE 4 (CONTINUED FROM DIAGNOSTIC PROCEDURE 2)

Inspecting SRS malfunctioning record

1. CONSIDER POSSIBILITY OF NOT ERASING SELF-DIAGNOSTIC RESULT AFTER REPAIRING

Is it the first time for maintenance of SRS?

YES or NO

YES >> Go to SRS-23, "DIAGNOSTIC PROCEDURE 2" .

NO >> Self-diagnostic result “SELF-DIAG [PAST]” (previously stored in the memory) might not be erased after repair. Go to SRS-28, "DIAGNOSTIC PROCEDURE 3" .

DIAGNOSTIC PROCEDURE 5

Inspecting SRS intermittent malfunction by using CONSULT-II — Diagnosis mode

Refer to GI-37, "CONSULT-II Start Procedure" .

CAUTION:

If CONSULT-II is used with no connection of CONSULT-II CONVERTER, malfunction might be detected in self-diagnosis depending on control unit which carry out CAN communication.

1. Touch “SELF-DIAG [PAST]”.

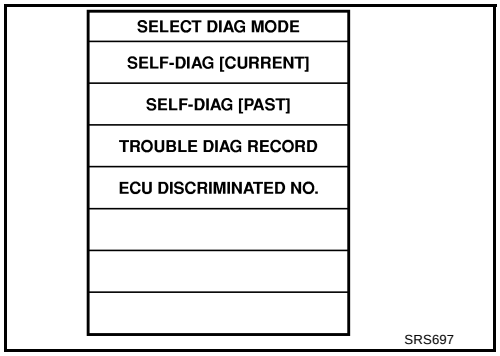

2. If diagnostic codes are displayed on “SELF-DIAG [PAST]”, go to step 6.

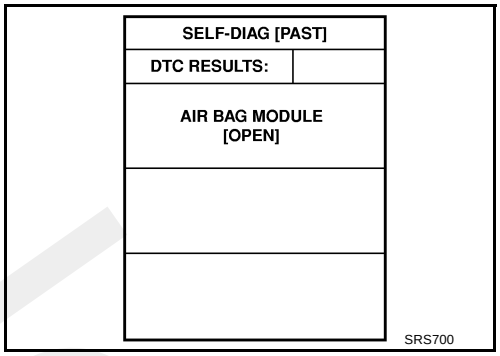

3. If no malfunction is detected on “SELF-DIAG [PAST]”, touch “BACK” and go back to “SELECT DIAG MODE”.

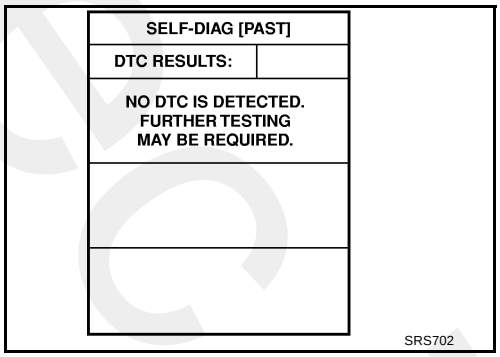

Precicoelec.ir

4. Touch “TROUBLE DIAG RECORD”.

NOTE:
With “TROUBLE DIAG RECORD”, diagnosis results previously erased by a reset operation can be displayed.

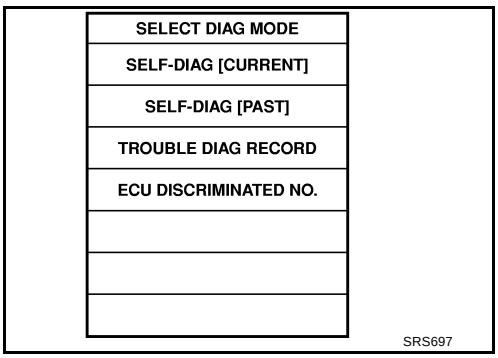

5. Diagnostic code is displayed on “TROUBLE DIAG RECORD”.
6. Touch “PRINT”.
7. Compare diagnostic codes to SRS-31, "DTC No. INdex (“SELF-DIAG [PAST]” or “TROUBLE DIAG RECORD”)" .
8. Touch “BACK” key of CONSULT-II until “SELECT SYSTEM” appears.
9. Turn ignition switch OFF, then turn off and disconnect CONSULT-II, and both battery cables.
10. Repair the system as outlined by the “Repair order” in “Intermittent Malfunction Diagnostic Code Chart”, that corresponds to the self-diagnostic result. For replacement procedure of component parts, refer to the Removal and Installation procedure for the appropriate component.
11. Go to SRS-28, "DIAGNOSTIC PROCEDURE 3" , for final checking.

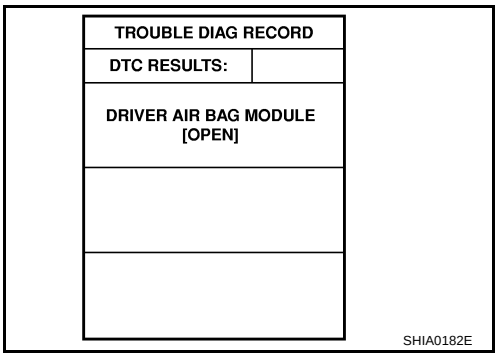

DTC No. INdex (“SELF-DIAG [PAST]” or “TROUBLE DIAG RECORD”)

Diagnostic item	Explanation		Repair order “Recheck SRS at each replacement”
NO DTC IS DETECTED.	When malfunction is indicated by the “AIR BAG” warning lamp in User mode.	● Low battery voltage (Less than 9V)	● Go to SRS-28, "DIAGNOSTIC PROCEDURE 3" .
	● No malfunction is detected.		● Go to SRS-28, "DIAGNOSTIC PROCEDURE 3" .
DRIVER AIRBAG MODULE [OPEN] [B1054]	● Driver air bag module circuit is open (including the spiral cable).		1. Visually check the wiring harness connection. 2. Replace the harness if it has visible damage. 3. If the harness check result is OK, replace driver air bag module, diagnosis sensor unit and spiral cable.
DRIVER AIRBAG MODULE [VB-SHORT] [B1055]	● Driver air bag module circuit is shorted to a power supply circuit (including the spiral cable).		
DRIVER AIRBAG MODULE [GND-SHORT] [B1056]	● Driver air bag module circuit is shorted to ground (including the spiral cable).		
DRIVER AIRBAG MODULE [SHORT] [B1057]	● Driver air bag module circuit is shorted between lines.		

Diagnostic item	Explanation	Repair order “Recheck SRS at each replacement”
ASSIST A/B MODULE [OPEN] [B1070]	● Front passenger air bag module circuit is open.	1. Visually check the wiring harness connection. 2. Replace the harness if it has visible damage. 3. If the harness check result is OK, replace the diagnosis sensor unit and front passenger air bag module.
ASSIST A/B MODULE [VB-SHORT] [B1071]	● Front passenger air bag module circuit is shorted to a power supply circuit.	
ASSIST A/B MODULE [GND-SHORT] [B1072]	● Front passenger air bag module circuit is shorted to ground.	
ASSIST A/B MODULE [SHORT] [B1073]	● Front passenger air bag module circuit is shorted between lines.	
CRASH ZONE SEN [UNIT FAIL] [B1033] [B1034] CRASH ZONE SEN [COMM FAIL] [B1035] CRASH ZONE SEN [UNMATCH] [B1036]	● Crash zone sensor	1. Visually check the wiring harness connection. 2. Replace the harness if it has visible damage. 3. If the harness check result is OK, replace crash zone sensor and diagnosis sensor unit.
SIDE MODULE LH [OPEN] [B1134]	● Front LH side air bag module circuit is open.	1. Visually check the wiring harness connection. 2. Replace the harness if it has visible damage. 3. If the harness check result is OK, replace the diagnosis sensor unit and LH side air bag module.
SIDE MODULE LH [VB-SHORT] [B1135]	● Front LH side air bag module circuit is shorted to a power supply circuit.	
SIDE MODULE LH [GND-SHORT] [B1136]	● Front LH side air bag module circuit is shorted to ground.	
SIDE MODULE LH [SHORT] [B1137]	● Front LH side air bag module circuit is shorted between lines.	
SIDE MODULE RH [OPEN] [B1129]	● Front RH side air bag module circuit is open.	1. Visually check the wiring harness connection. 2. Replace the harness if it has visible damage. 3. If the harness check result is OK, replace the diagnosis sensor unit and RH side air bag module.
SIDE MODULE RH [VB-SHORT] [B1130]	● Front RH side air bag module circuit is shorted to a power supply circuit.	
SIDE MODULE RH [GND-SHORT] [B1131]	● Front RH side air bag module circuit is shorted to ground.	
SIDE MODULE RH [SHORT] [B1132]	● Front RH side air bag module circuit is shorted between lines.	
SATELLITE SENS LH [UNIT FAIL] [B1118] [B1119] SATELLITE SENS LH [COMM FAIL] [B1120] SATELLITE SENS LH [UNMATCH] [B1121]	● LH side air bag (Satellite) sensor	1. Visually check the wiring harness connection. 2. Replace the harness if it has visible damage. 3. If the harness check result is OK, replace the diagnosis sensor unit and LH side air bag (Satellite) sensor.

nasicoelectr

Diagnostic item	Explanation	Repair order "Recheck SRS at each replacement"
SATELLITE SENS RH [UNIT FAIL] [B1113] [B1114] SATELLITE SENS RH [COMM FAIL] [B1115] SATELLITE SENS RH [UNMATCH] [B1116]	● RH side air bag (Satellite) sensor	1. Visually check the wiring harness connection. 2. Replace the harness if it has visible damage. 3. If the harness check result is OK, replace the diagnosis sensor unit and RH side air bag (Satellite) sensor.
PRE-TEN FRONT LH [OPEN] [B1086]	● Front LH pre-tensioner circuit is open.	1. Visually check the wiring harness connections. 2. Replace the harness if it has visible damage. 3. If the harness check result is OK, replace the diagnosis sensor unit and front LH seat belt.
PRE-TEN FRONT LH [VB-SHORT] [B1087]	● Front LH pre-tensioner circuit is shorted to a power supply circuit.	
PRE-TEN FRONT LH [GND-SHORT] [B1088]	● Front LH pre-tensioner circuit is shorted to ground.	
PRE-TEN FRONT LH [SHORT] [B1089]	● Front LH pre-tensioner circuit is shorted between lines.	
PRE-TEN FRONT RH [OPEN] [B1081]	● Front RH pre-tensioner circuit is open.	1. Visually check the wiring harness connections. 2. Replace the harness if it has visible damage. 3. If the harness check result is OK, replace the diagnosis sensor unit and front RH seat belt.
PRE-TEN FRONT RH [VB-SHORT] [B1082]	● Front RH pre-tensioner circuit is shorted to a power supply circuit.	
PRE-TEN FRONT RH [GND-SHORT] [B1083]	● Front RH pre-tensioner circuit is shorted to ground.	
PRE-TEN FRONT RH [SHORT] [B1084]	● Front RH pre-tensioner circuit is shorted between lines.	
CURTAIN MODULE LH [OPEN] [B1150]	● LH side curtain air bag module circuit is open.	1. Visually check the wiring harness connection. 2. Replace the harness if it has visible damage. 3. If the harness check result is OK, replace the diagnosis sensor unit and LH side curtain air bag module.
CURTAIN MODULE LH [VB-SHORT] [B1151]	● LH side curtain air bag module circuit is shorted to a power supply circuits.	
CURTAIN MODULE LH [GND-SHORT] [B1152]	● LH side curtain air bag module circuit is shorted to ground.	
CURTAIN MODULE LH [SHORT] [B1153]	● LH side curtain air bag module circuit is shorted between lines.	

Peiceelec.ir

Diagnostic item	Explanation	Repair order “Recheck SRS at each replacement”
CURTAIN MODULE RH [OPEN] [B1145]	● RH side curtain air bag module circuit is open.	1. Visually check the wiring harness connection. 2. Replace the harness if it has visible damage. 3. If the harness check result is OK, replace the diagnosis sensor unit and RH side curtain air bag module.
CURTAIN MODULE RH [VB-SHORT] [B1146]	● RH side curtain air bag module circuit is shorted to a power supply circuit.	
CURTAIN MODULE RH [GND-SHORT] [B1147]	● RH side curtain air bag module circuit is shorted to ground.	
CURTAIN MODULE RH [SHORT] [B1148]	● RH side curtain air bag module circuit is shorted between lines.	
CONTROL UNIT [B1001-B1015] [B1026-B1031] [B1042-B1047] [B1058-B1063] [B1074-B1079] [B1106-B1111] [B1122-B1127] [B1138-B1143] [B1202-B1207]	● Diagnosis sensor unit is malfunctioning.	1. Visually check the wiring harness connection. 2. Replace the diagnosis sensor unit.
PASS A/B INDCTR CKT [B1023]	● Cutoff telltale circuit is open or shorted to grand or the circuits are shorted each other.	1. Visually check the wiring harness connection. 2. Replace the harness if it has visible damage. 3. Replace cutoff telltale. 4. Replace the diagnosis sensor unit.
OCCUPANT SENS C/U [UNIT FAIL] [B1017] [B1020] [B1021]	● Trouble occurs in Occupant Classification System-CU.	● Replace passenger side seat cushion assembly.
OCCUPANT SENS C/U [COMM FAIL] [B1022]	● Trouble occurs in Occupant Classification System-CU, circuit of Occupant Classification System-CU—Diagnosis Senser Unit, or Diagnosis Sensor Unit.	1. Visually check the wiring harness connection. 2. Replace the harness if it has visible damage. 3. Replace passenger side seat cushion assembly. 4. Replace the diagnosis sensor unit.
OCCUPANT SENS [UNIT FAIL] [B1018]	● Trouble occurs in Occupant Classification System-SENS.	● Replace passenger side seat cushion assembly.
BELT TENSION SENS [UNIT FAIL] [B1019]	● Trouble occurs in Belt Tension sensor (BTS), circuit of BTS—Occupant Classification System-CU, or Occupant Classification System-CU.	1. Visually check the wiring harness connection. 2. Replace the harness if it has visible damage. 3. Replace passenger side seat belt assembly. 4. Replace the diagnosis sensor unit.

nasicoelec.ir

Diagnostic item	Explanation	Repair order “Recheck SRS at each replacement”
FRONTAL COLLISION-DETECTION [B1209]	● Seat belt pre-tensioner and front air bag are deployed.	● Go to SRS-56, "For Frontal Collision" .
SIDE COLLISION DETECTION [B1210]	● Side and curtain air bag is deployed.	● Go to SRS-58, "For Side Collision" .

pasicoelec.ir

Trouble Diagnosis without CONSULT-II

NHS0005M

DIAGNOSTIC PROCEDURE 6

Inspecting SRS Malfunctioning Parts By Using “AIR BAG” Warning Lamp — Diagnosis Mode

NOTE:
SRS will not enter Diagnosis mode if no malfunction is detected in User mode.

1. Turn ignition switch ON.
2. After “AIR BAG” warning lamp lights for 7 seconds, turn ignition switch OFF within 1 second.
3. Wait more than 3 seconds.
4. Repeat the steps 1 to 3 twice. (Perform three times in all.)
5. Turn ignition switch ON.

SRS is now in Diagnosis mode.
“AIR BAG” warning lamp operates in Diagnosis mode as follows:

WARNING LAMP FLASH CODE CHART

<Diagnosis results (previously stored in the memory) might not be erased after repair or intermittent malfunctions have been detected in the past.>

Flash pattern	Repair order
a through b are repeated. 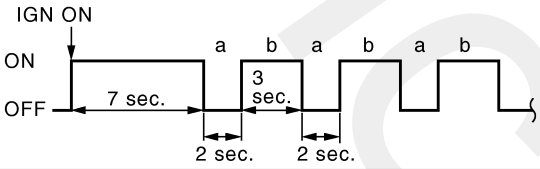	1. Erase memory. (Once key switch is turned from OFF to ON, TROUBLE DIAG RECORD will be erased.)

PHIA0532E

<Driver air bag module>

Flash pattern	Repair order
a through d are repeated. d: Two flashes indicate malfunctioning driver air bag module circuit. 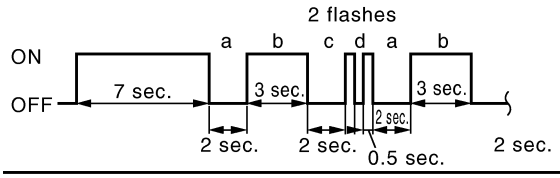	1. Visually check the wiring harness connection. 2. Replace the harness if it has visible damage. 3. Replace the spiral cable. 4. Replace the related harness.

PHIA1233E

<Diagnosis sensor unit>

Flash pattern	Repair order
a through d are repeated. d: Seven flashes indicate malfunctioning diagnosis sensor unit circuit. 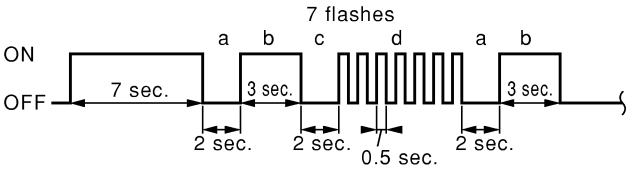	1. Visually check the wiring harness connections. 2. Replace the harness if it has visible damage. 3. Replace the diagnosis sensor unit. 4. Replace the related harness.

SHIA0028E

<Front passenger air bag module>

Flash pattern	Repair order
a through d are repeated. d: Eight flashes indicate malfunctioning front passenger air bag module circuit. 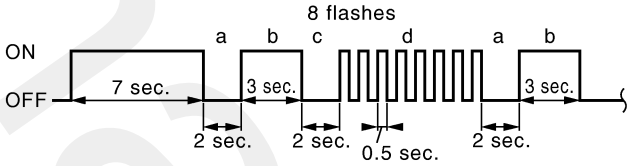 	1. Visually check the wiring harness connection. 2. Replace the harness if it has visible damage. 3. Replace the related harness.

PHIA1234E

<Crash zone sensor>

Flash pattern	Repair order
a through d are repeated. d: Six flashes indicate malfunctioning crash zone sensor circuit. 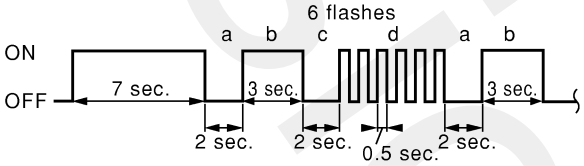 	1. Visually check the wiring harness connection. 2. Replace the harness if it has visible damage. 3. Replace the crash zone sensor. 4. Replace the diagnosis sensor unit. 5. Replace the related harness.

SHIA0083E

<Front RH seat belt pre-tensioner>

Flash pattern	Repair order
a through d are repeated. d: One flash indicates malfunctioning front RH seat belt pre-tensioner circuit. 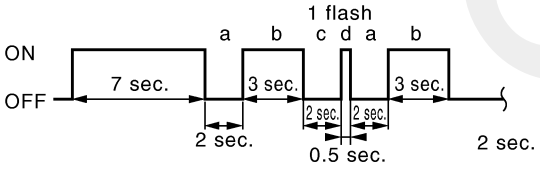 	1. Visually check the wiring harness connections. 2. Replace the harness if it has visible damage. 3. Replace the related harness.

PHIA1235E

<Front LH seat belt pre-tensioner>

Flash pattern	Repair order
a through d are repeated. d: Three flashes indicate malfunctioning front LH seat belt pre-tensioner circuit. 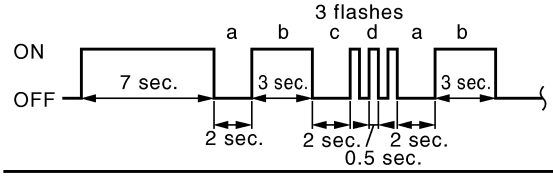 	1. Visually check the wiring harness connections. 2. Replace the harness if it has visible damage. 3. Replace the related harness.

PHIA1236E

freeoel.ec.ir

<RH side air bag (Satellite) sensor>

Flash pattern	Repair order
a through f are repeated. f: Three flashes indicate malfunctioning RH side air bag (Satellite) sensor circuit. 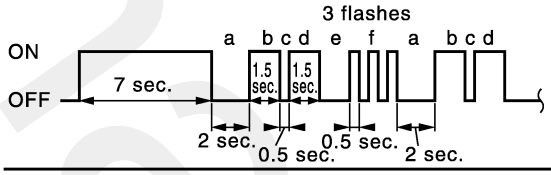	1. Visually check the wiring harness connection. 2. Replace the harness if it has visible damage. 3. Replace the RH side air bag (Satellite) sensor. 4. Replace the diagnosis sensor unit. 5. Replace the related harness.

SHIA0032E

<LH side air bag (Satellite) sensor>

Flash pattern	Repair order
a through f are repeated. f: Four flashes indicate malfunctioning LH side air bag (Satellite) sensor. 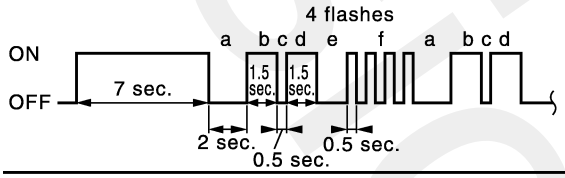	1. Visually check the wiring harness connection. 2. Replace the harness if it has visible damage. 3. Replace the LH side air bag (Satellite) sensor. 4. Replace the diagnosis sensor unit. 5. Replace the related harness.

SHIA0033E

<Front RH side air bag module>

Flash pattern	Repair order
a through f are repeated. f: One flash indicates malfunctioning front RH side air bag module circuit. 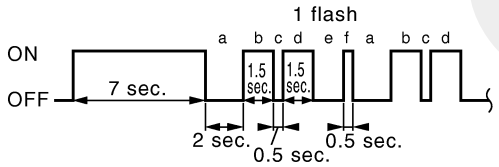	1. Visually check the wiring harness connection. 2. Replace the harness if it has visible damage. 3. Replace the related harness.

PHIA1237E

<Front LH side air bag module>

Flash pattern	Repair order
a through f are repeated. f: Two flashes indicate malfunctioning front LH side air bag module circuit. 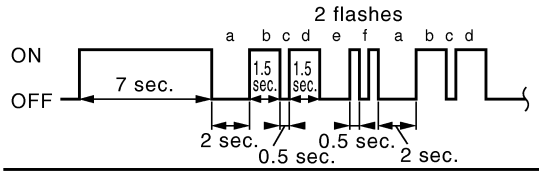	1. Visually check the wiring harness connection. 2. Replace the harness if it has visible damage. 3. Replace the related harness.

PHIA1238E

nissanelec.ir

<RH side curtain air bag module>

Flash pattern	Repair order
a through f are repeated. f: Five flashes indicate malfunctioning RH side curtain air bag module circuit. 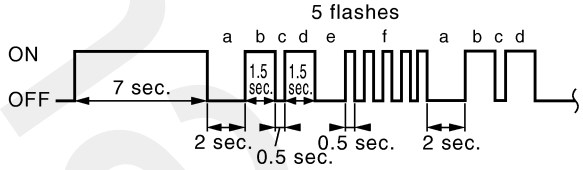	1. Visually check the wiring harness connection. 2. Replace the harness if it has visible damage. 3. Replace the related harness.

PHIA1240E

<LH side curtain air bag module>

Flash pattern	Repair order
a through f are repeated. f: Six flashes indicate malfunctioning LH side curtain air bag module circuit. 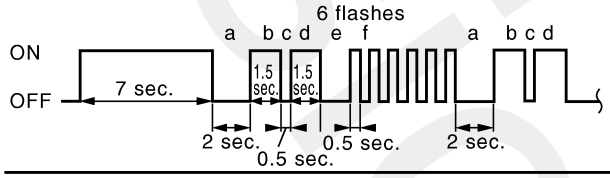	1. Visually check the wiring harness connection. 2. Replace the harness if it has visible damage. 3. Replace the related harness.

PHIA1241E

<Occupant classification system>

Flash pattern	Repair order
a through d are repeated. d: Five flashes indicate malfunctioning OCS control unit. 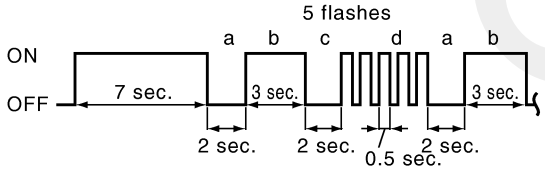	1. Visually check the wiring harness connection. 2. Replace the harness if it has visible damage. 3. Replace front passenger seat cushion and occupant classification system control unit as an assembly. 4. Replace the diagnosis sensor unit.

PHIA1242E

<Front passenger air bag off indicator>

Flash pattern	Repair order
a through d are repeated. d: Eleven flashes indicate malfunctioning front passenger air bag off indicator. 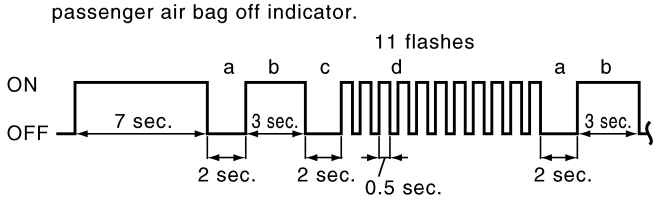	1. Visually check the wiring harness connection. 2. Replace the harness if it has visible damage. 3. Replace front passenger air bag off indicator unit. 4. Replace the diagnosis sensor unit. 5. Replace the related harness.

PHIA1243E

A B C D E F G SRS I J K L M

Nasicoelec.ir

Trouble Diagnosis: “AIR BAG” Warning Lamp Does Not Turn OFF

NHS0005N

DIAGNOSTIC PROCEDURE 7

1. CHECK THE DEPLOYMENT OF AIR BAG MODULE

Is air bag module deployed?

YES or NO

YES >> Refer to SRS-56, "COLLISION DIAGNOSIS" .
NO >> GO TO 2.

2. CHECK THE AIR BAG FUSE

Check 10A fuse [No.13, located in fuse block (J/B)].
Refer to PG-3, "POWER SUPPLY ROUTING CIRCUIT" .

OK or NG

OK >> GO TO 4.
NG >> GO TO 3.

3. CHECK AIR BAG FUSE AGAIN

Replace “AIR BAG” fuse and turn ignition switch ON.

Does the “AIR BAG” fuse blow again?

YES >> Repair or replace main harness.
NO >> **INSPECTION END**

4. CHECK DIAGNOSIS SENSOR UNIT

Connect CONSULT-II and touch “START”.
Is “AIR BAG” displayed on CONSULT-II?

YES or NO

YES >> GO TO 5.
NO >> Visually check the wiring harness connection of diagnosis sensor unit. If the harness connection check result is OK, replace diagnosis sensor unit.

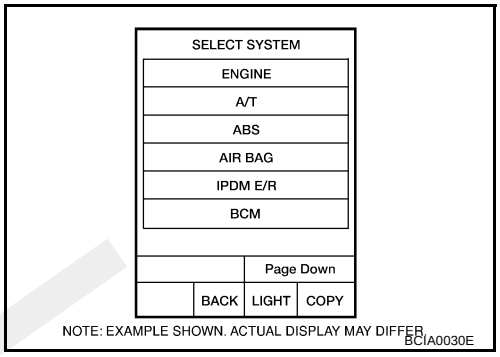

5. CHECK HARNESS CONNECTION

Is harness connection between warning lamp and diagnosis sensor unit OK?

OK or NG

OK >> Replace diagnosis sensor unit.
NG >> Connect “AIR BAG” warning lamp and diagnosis sensor unit connector properly. If “AIR BAG” warning lamp still does not go off, replace harness.

nasicoelec.ir

Trouble Diagnosis: “AIR BAG” Warning Lamp Does Not Turn ON

NHS0005O

DIAGNOSTIC PROCEDURE 8

1. CHECK METER FUSE

Check 10A fuse [No.14, located in fuse block (J/B)].
Refer to PG-3, "POWER SUPPLY ROUTING CIRCUIT" .

OK or NG

OK >> GO TO 3.
NG >> GO TO 2.

2. CHECK METER FUSE AGAIN

Replace 10A fuse [No.14, located in fuse block (J/B)] and turn ignition switch ON.

Does the meter fuse blow again?

YES >> Repair or replace the related harness.
NO >> **INSPECTION END**

3. CHECK HARNESS CONNECTION BETWEEN DIAGNOSIS SENSOR UNIT AND COMBINATION METER

Disconnect diagnosis sensor unit connector and turn ignition switch ON.
Does “AIR BAG” warning lamp turn on?

YES or NO

YES >> Replace diagnosis sensor unit.
NO >> Replace combination meter assembly.

Pelicoelec.ir

Trouble Diagnosis: Passenger Seatbelt Warning System

NHS0009Y

1. CHECK THE SYSTEM 1

Check seatbelt warning lamp function.

Seatbelt warning lamp turns ON in the following conditions.

- Driver seatbelt is fastened.
- Occupant is on passenger seat.
- Passenger seatbelt is not fasten.

OK or NG

OK >> GO TO 2.
NG >> Check the followings.
- Harness between air bag diagnosis sensor unit and combination meter.
- Seatbelt buckle switch (passenger side) circuit.
- Seatbelt buckle switch (passenger side).
  If these are OK, replace air bag diagnosis sensor unit.

2. CHECK THE SYSTEM 2

Check seatbelt warning lamp function.

Seatbelt warning lamp turns OFF in the following conditions.

- Driver seatbelt is fastened.
- Occupant is on passenger seat.
- Passenger seatbelt is fastened.

OK or NG

OK >> System is OK.
NG >> Check the followings.
- Seatbelt buckle switch (passenger side) circuit.
- Seatbelt buckle switch (passenger side).
  If these are OK, replace air bag diagnosis sensor unit.

Pelicoelec.ir

DRIVER AIR BAG MODULE

PFP:K8510

Removal and Installation

NHS0005P

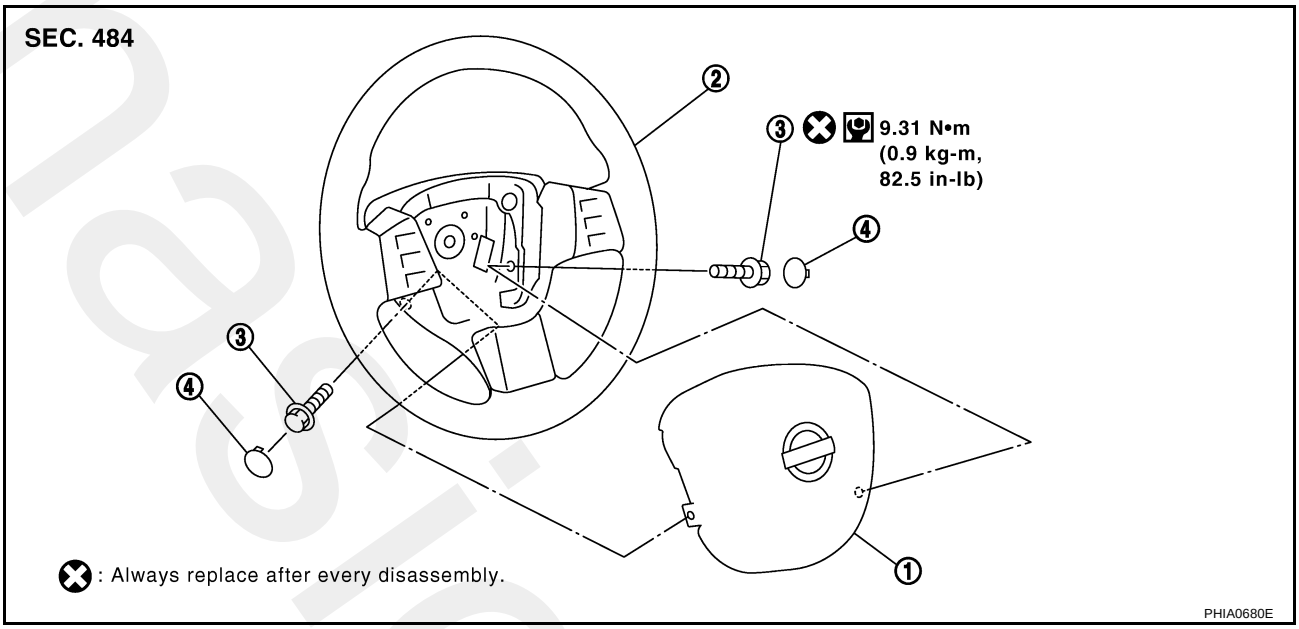

1. Driver air bag module
2. Steering wheel
3. Special bolt (TORX bolt)
4. Side lid

REMOVAL

CAUTION:

- **Before servicing SRS, turn the ignition switch off, disconnect both battery cables and wait at least 3 minutes.**
- **Always work from the side of driver air bag module.**
- **Do not use air tools or electric tools for servicing.**

1. Remove the side lids.
2. Remove the left and right side special bolts (TORX bolts T30).

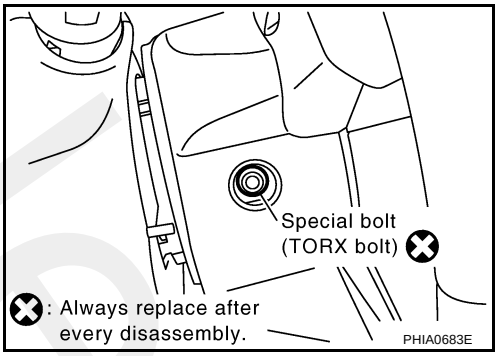

3. Lift up the driver air bag module.
4. Disconnect the air bag harness connectors, and remove the driver air bag module.

NOTE:

- For installing / removing driver air bag module connector, insert thin screwdriver wrapped in tape into notch, lift lock and remove connector.
- Install connector with lock raised, and push lock into connector.
- After installing the connector, make sure that the lock is pushed securely into it.

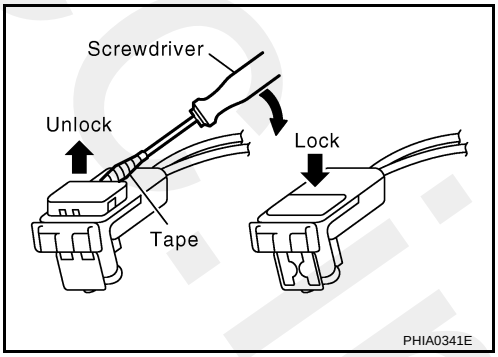

CAUTION:

- **Always work from the side of driver air bag module.**
- **Always place driver air bag module with pad side facing upward.**
- **Do not insert any foreign objects (screwdriver, etc.) into driver air bag module.**
- **Do not disassemble driver air bag module.**
- **Do not use old bolts after removal; replace with new bolts.**
- **Do not expose the driver air bag module to temperatures exceeding 90°C (194°F).**

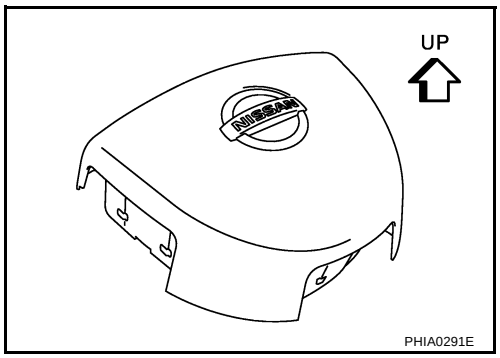

- **Replace driver air bag module if it has been dropped or sustained an impact.**
- **Do not allow oil, grease or water to come in contact with the front passenger air bag module.**

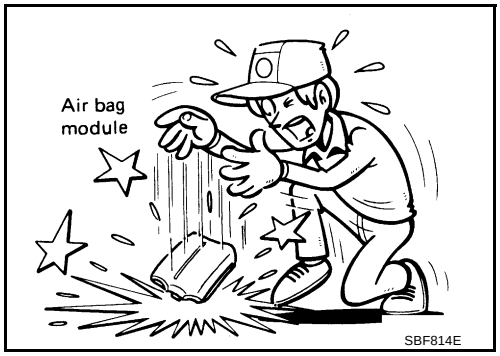

INSTALLATION

Install in the reverse order of removal.

- For installing the air bag module, tighten the special bolts (TORX bolts).
- After the work is completed, perform self-diagnosis to check that no malfunction is detected. Refer to SRS-21, "SRS Operation Check" .

nasicoelec.ir

SPIRAL CABLE

PFP:25554

Removal and Installation

NHS0005Q

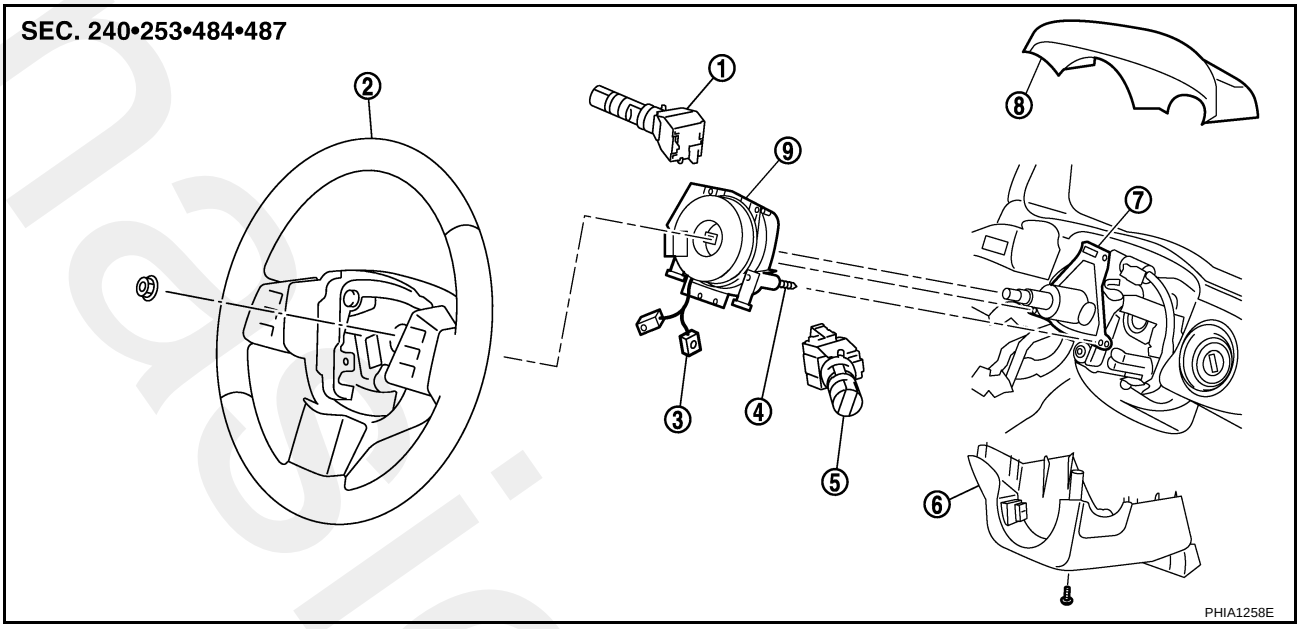

1. Lighting and turn signal switch
2. Steering wheel
3. Drive air bag module connector
4. Screw (Do not remove)
5. Wiper and washer switch
6. Steering column cover lower
7. Steering column assembly
8. Steering column cover upper
9. Spiral cable

REMOVAL

CAUTION:

- **Before servicing SRS, turn ignition switch OFF, disconnect both battery cables and wait at least 3 minutes.**
- **Do not use air tools or electric tools for servicing.**

1. Remove driver air bag module. Refer to SRS-43, "Removal and Installation" .
2. Disconnect steering switch harness connector.
3. Set the steering wheel in the neutral position.
4. Remove steering wheel. Refer to PS-9, "STEERING WHEEL" .
5. Remove steering column cover upper and lower. Refer to IP-12, "(F) Steering Column Cover" .
6. Loosen the spiral cable fixing screws, and then remove the spiral cable.

   CAUTION:

   - **Do not disassemble spiral cable.**
   - **Do not apply lubricant to the spiral cable.**
7. Disconnect the horn switch connector, and then spiral cable connector.

   CAUTION:

   - **Do not tap or bump the steering wheel.**
   - **Also, with the steering linkage disconnected the cable may snap by turning the steering wheel beyond the limited number of turns.**

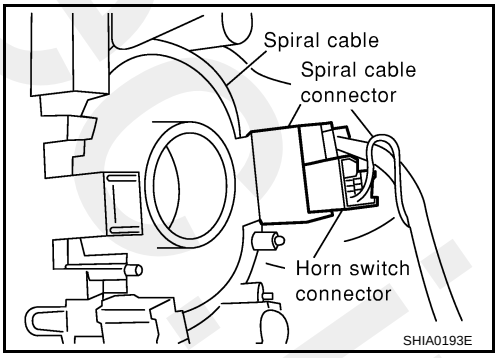

INSTALLATION

Install in the reverse order of removal.

CAUTION:

- **The spiral cable may snap by steering operation if the cable is installed in an improper position.**
- **The neutral position is set as follows.**
  Turn quietly the spiral cable clockwise to the end position. Then turn it counterclockwise (about 2 and half turns) and stop turning at the point on which the stopper insertion holes are in the same position.
  The service part is installed in the neutral position by the stopper and can be set without adjusting after the stopper is removed.
- **Do not turn the spiral cable rashly and also beyond the limit number of turns. (These will cause cable snap.)**
- **Adjust the spiral cable locating pin (showed as A inthe figure) to the steering wheel locating pin hole (showed as C in the figuer).**
- **Secure the air bag harness with the harness fixing hook.**
- **After the work is completed, perform self-diagnosis to make sure no malfunction is detected. Refer to SRS-21, "SRS Operation Check" .**

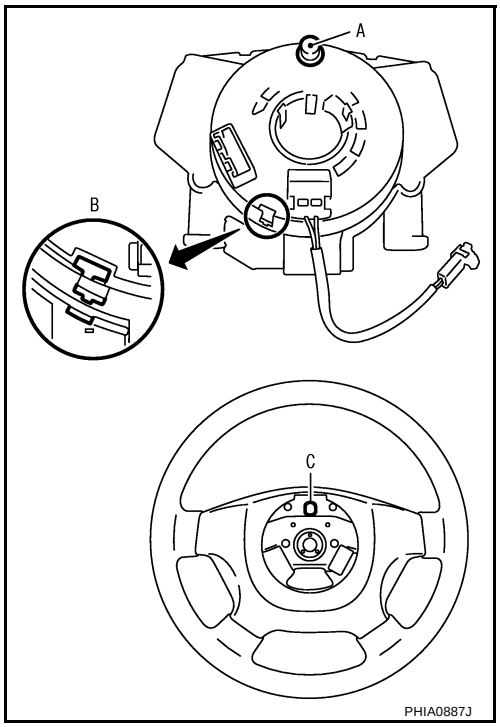

iosicoelec.ir

FRONT PASSENGER AIR BAG MODULE

PFP:K8515

Removal and Installation

NHS0005R

REMOVAL

CAUTION:

- **Before servicing SRS, turn ignition switch OFF, disconnect both battery cables and wait at least 3 minutes.**
- **Always work from the side of or under front passenger air bag module.**
- **Do not use air tools or electric tools for servicing.**

1. Remove instrument passenger lower panel and glove box assembly. Refer to IP-13, "(J) Instrument Passenger Lower Panel Assembly" .
2. Remove cluster lid C. Refer to IP-14, "(N) Cluster Lid C" .
3. Remove side ventilator assembly (RH). Refer to IP-13, "(H) Side Ventilator Assembly (LH/RH)" .
4. Remove instrument side finisher (RH). Refer to IP-13, "(I) Instrument Side Finisher (LH/RH)" .
5. Disconnect passenger air bag connector.
6. Remove bolt, and then remove instrument passenger upper panel assembly.

   Fixing bolt: 24.5 N·m (2.5 kg-m, 18 ft-lb)

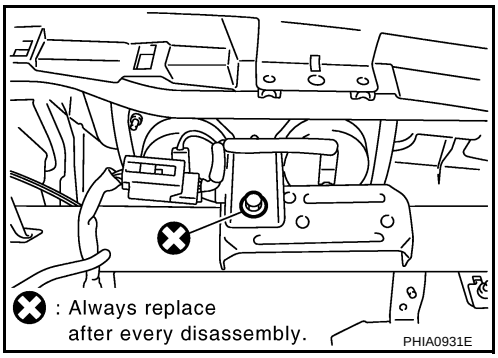

7. Remove nuts, and then remove passenger air bag module.

   Fixing nuts: 6 N·m (0.6 kg-m, 53 in-lb)

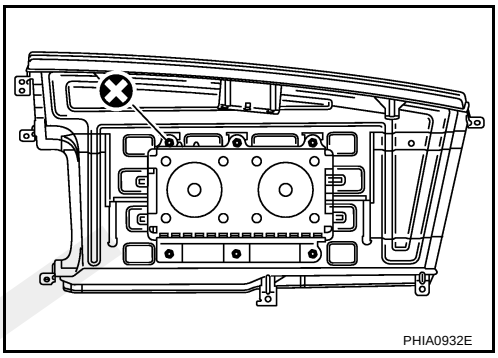

CAUTION:

- **Always place front passenger air bag module with the air bag deployment side facing upward.**
- **Do not insert any foreign objects (screwdriver, etc.) into front passenger air bag module.**
- **Do not disassemble front passenger air bag module.**
- **Do not use old bolts after removal; replace with new bolts.**
- **Replace front passenger air bag module if it has been dropped or sustained an impact.**
- **Do not expose the front passenger air bag module to temperatures exceeding 90°C (194°F).**
- **Do not allow oil, grease or water to come in contact with the front passenger air bag module.**
- **After front passenger air bag module inflates, the instrument panel assembly should be replaced.**

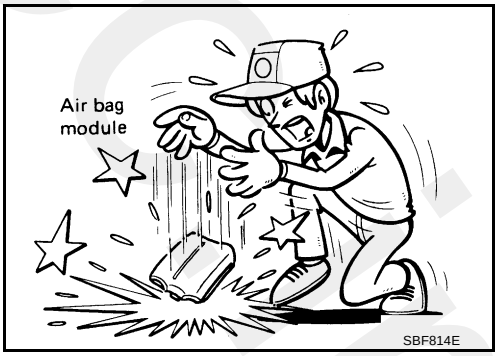

INSTALLATION

Install in the reverse order of removal.

CAUTION:

- **Always work from the side of or under front passenger air bag module.**
- **After the work is completed, perform self-diagnosis to make sure no malfunction is detected. Refer to SRS-21, "SRS Operation Check" .**

nasicoelec.ir

SIDE CURTAIN AIR BAG MODULE

PFP:985P0

Removal and Installation

NHS0005T

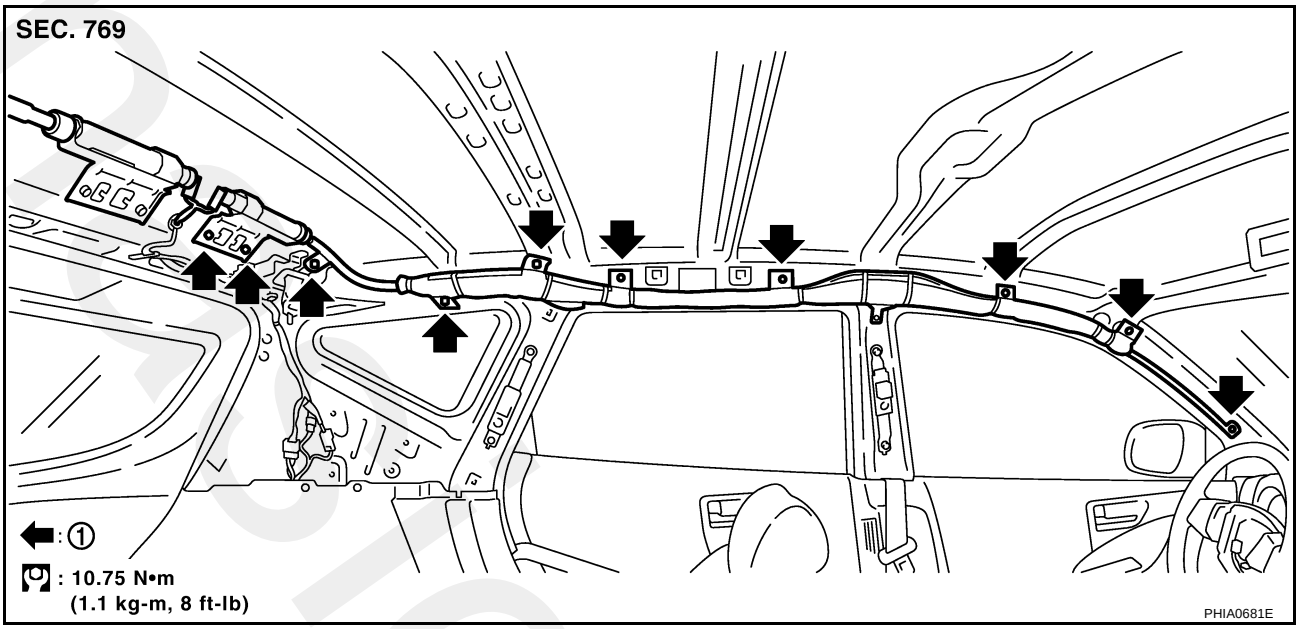

1. Bolt

REMOVAL

CAUTION:

- **Before servicing SRS, turn ignition switch OFF, disconnect both battery cables and wait at least 3 minutes.**
- **Do not use air tools or electric tools for servicing.**

1. Remove headlining. Refer to EI-35, "Removal and Installation" .
2. Disconnect side curtain air bag connector.
3. Remove side curtain air bag module fixing bolts.
4. Remove the side curtain air bag module.

CAUTION:

- **Always place the side curtain air bag module with the warning label facing upward.**
- **Do not disassemble side curtain air bag module.**
- **Do not insert any foreign objects (screwdriver, etc.) into air bag module connector.**

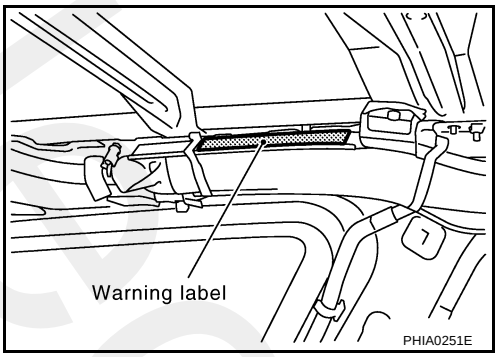

- **Replace side curtain air bag module if it has been dropped or sustained an impact.**
- **Do not expose the air bag module to temperatures exceeding 90°C (194°F).**
- **Do not allow oil, grease or water to come in contact with the side curtain air bag module.**

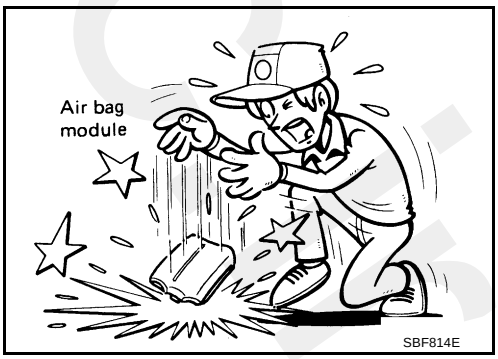

INSTALLATION

Install in the reverse order of removal.

CAUTION:

- **Always place the side curtain air bag module with the warning label facing upward.**
- **After replacement of side curtain air bag module, perform self-diagnosis to make sure no malfunction is detected. Refer to SRS-21, "SRS Operation Check" .**

Masicoelec.ir

CRASH ZONE SENSOR

PFP:98531

Removal and Installation

NHS0005U

REMOVAL

CAUTION:

- **Before servicing SRS, turn ignition switch OFF, disconnect both battery cables and wait at least 3 minutes.**
- **Do not use air tools or electric tools for servicing.**

1. Remove front grille. Refer to EI-19, "FRONT GRILLE" .
2. Remove crash zone sensor connector.
3. Remove crash zone sensor fixing nuts.

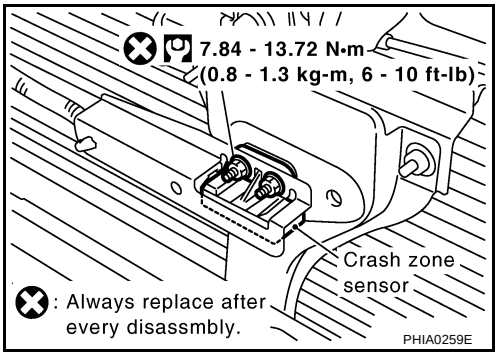

CAUTION:

- **Replace crash zone sensor if it has been dropped or sustained an impact.**
- **Do not disassemble crash zone sensor.**

INSTALLATION

Install in the reverse order of removal.

CAUTION:

- **Check crash zone sensor for proper installation.**
- **After the work is complete, perform self-diagnosis to make sure no malfunction is detected. Refer to SRS-21, "SRS Operation Check" .**

Nissanelec.ir

SIDE AIR BAG (SATELLITE) SENSOR

PFP:98830

Removal and Installation

NHS0005V

REMOVAL

CAUTION:

- **Before servicing SRS, turn ignition switch OFF, disconnect both battery cables and wait at least 3 minutes.**
- **Do not use air tools or electric tools for servicing.**

1. Remove seat belt pre-tensioner. Refer to SB-3, "Removal and Installation of Front Seat Belt" .
2. Remove side air bag (Satellite) sensor fixing nuts.
3. Remove the side air bag (Satellite) sensor connector.

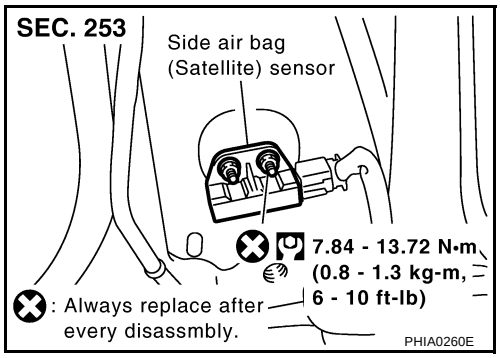

CAUTION:

- **Do not use old nuts; replace with new ones.**
- **Check side air bag (Satellite) sensor to ensure it is free of deformities, dents, cracks or rust. If it shows any visible signs of damage, replace it with new one.**
- **Do not disassemble side air bag (Satellite) sensor.**
- **Replace side air bag (Satellite) sensor if it has been dropped or sustained an impact.**

INSTALLATION

Install in the reverse order of removal.

CAUTION:

- **Check side air bag (Satellite) sensor for proper installation.**
- **After replacement of side air bag (Satellite) sensor, perform self-diagnosis to make sure no malfunction is detected. Refer to SRS-21, "SRS Operation Check" .**

Pasieoelec.ir

FRONT SEAT BELT PRE-TENSIONER

PFP:86884

Removal and Installation

NHS0005W

For removal and installation procedures, refer to SB-3, "Removal and Installation of Front Seat Belt" .

nasicoelec.ir

DIAGNOSIS SENSOR UNIT

PFP:28556

Removal and Installation

NHS0005X

REMOVAL

CAUTION:

- **Before servicing SRS, turn ignition switch OFF, disconnect both battery cables and wait at least 3 minutes.**
- **Do not use air tools or electric tools for servicing.**

1. Disconnect each harness connector for the air bag module and seat belt pre-tensioner.
2. Remove center console. Refer to IP-18, "Removal and Installation" .
3. Disconnect diagnosis sensor unit connector.
4. Remove the bolts from the diagnosis sensor unit.

Hex bolts: 24.5 N·m (2.5 kg-m, 18 ft-lb)

Ground bolt: 6.9 N·m (0.7 kg-m, 61 in-lb)

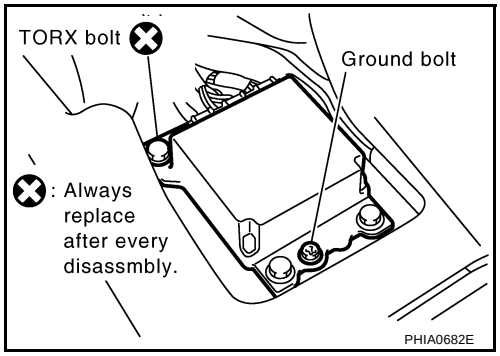

CAUTION:

- **Do not use old bolts. Replace with new ones.**
- **Check diagnosis sensor unit bracket to ensure it is free of deformities, dents, cracks or rust. If it shows any visible signs of damage, replace with new one.**
- **Replace diagnosis sensor unit if it has been dropped or sustained an impact.**

INSTALLATION

Install in the reverse order of removal.

CAUTION:

- **Check the diagnosis sensor unit for proper installation.**
- **After replacement of diagnosis sensor unit, perform self-diagnosis to make sure no malfunction is detected. Refer to SRS-21, "SRS Operation Check" .**

ECU DISCRIMINATED NO.

After replacing the diagnosis sensor unit, confirm that the diagnosis sensor unit identification is correct for the vehicle as equipped.

Specification	ECU DISCRIMINATED No.
2WD/AWD: Driver air bag module, passenger air bag module, side air bag module and side curtain air bag module, seat belt pre-tensioner	FAE8

nissanelec.ir

OCCUPANT CLASSIFICATION SYSTEM CONTROL UNIT

PFP:98852

Removal and Installation

NHS000A8

The occupant classification system control unit, seat pressure sensor, and bladder are an integral part of the front passenger seat cushion and are replaced as an assembly. Refer to SE-101, "Removal and Installation" .

nasicoelec.ir

COLLISION DIAGNOSIS

PFP:00015

For Frontal Collision

NHS0005Z

To repair the SRS, perform the following steps.

When SRS (except the front side air bag and side curtain air bag modules) is activated in a collision:

1. Replace the diagnosis sensor unit.
2. Remove the air bag modules (except the front side air bag modules and side curtain air bag modules), crash zone sensor assembly, bracket and seat belt pre-tensioner assemblies.
3. Check the SRS components using the table below:

– Replace any SRS components showing visible signs of damage (dents, cracks and deformation).

4. Install new air bag modules (except the front side air bag modules and side curtain air bag modules) crash zone sensor assembly, bracket and seat belt pre-tensioner assemblies.
5. Conduct self-diagnosis using CONSULT-II or “AIR BAG” warning lamp. Refer to SRS-21, "SRS Operation Check" for details. Ensure entire SRS operates properly.

When SRS is not activated in a collision:

1. Check the SRS components using the table below:

– Replace any SRS components showing visible signs of damage (dents, cracks and deformation).

2. Conduct self-diagnosis using CONSULT-II or “AIR BAG” warning lamp. Refer to SRS-21, "SRS Operation Check" for details. Ensure entire SRS operates properly.

When only one front air bag module is activated in a collision:

1. Replace the following components:

– Diagnosis sensor unit

– Crash zone sensor

– Activated front air bag and seat belt pre-tensioner.

2. Check the other SRS components using the table below. (Refer to “SRS is NOT activated”.)

– Replace any SRS components showing visible signs of damage (dents, cracks and deformation).

3. Conduct self-diagnosis using CONSULT-II or “AIR BAG” warning lamp. Refer to SRS-21, "SRS Operation Check" for details. Ensure entire SRS operates properly.

Only one front air bag may inflate a crash, depending on the crash severity and whether the front occupants are belted or unbelted. This does not indicate improper performance of the system. Perform self-diagnosis to make sure the entire SRS operates properly.

SRS INSPECTION (FOR FRONTAL COLLISION)

Part	SRS is activated	SRS is NOT activated
Driver airbag module	If the Driver airbag has deployed: REPLACE. Install with new fasteners.	If the Driver air bag has NOT been activated: [same text as in current manual]
Passenger front airbag module	If the Passenger front airbag has deployed: REPLACE. Install with new fasteners.	If the Passenger front air bag has NOT been activated: [same text as in current manual]
Crash zone sensor	If any of the front airbags or seat belt pre-tensionsers have been activated: REPLACE the crash zone sensor and bracket with new fasteners.	If the front airbags or seat belt pre-tensionsers have NOT been activated: [same text as in current manual]
Seat belt pre-tensioner assemblies	If the driver or passenger Seat belt pre-tensioner has been activated: REPLACE the seat belt pre-tensioner assemblies with new fasteners.	If the pre-tensioners have NOT been activated: [same text as in current manual]
Diagnosis sensor unit	If any of the SRS components have been activated: REPLACE the Diagnosis sensor unit. Install with new fasteners.	If none of the SRS components have been activated: [same text as in current manual]

Part	SRS is activated	SRS is NOT activated
Steering wheel	[same text as in current manual]	
Spiral cable	If the Driver airbag has deployed: REPLACE the spiral cable.	If the Driver airbag has not deployed: [same text as in current manual]
Harness and connectors	1. Check connectors for poor connection, damage, and terminals for deformities. 2. Check harness for binding, chafing, cuts, or deformities. 3. If no damage is found, reinstall the harness and connectors. 4. If damaged—REPLACE damaged section of harness. Do not repair, splice or modify any SRS harness.	
Instrument panel	1. Visually check instrument panel for damage. 2. If no damage is found, reinstall the instrument panel. 3. If damaged—REPLACE the instrument panel with bolts.	

nejicoelec.ir

For Side Collision

NHS00060

WHEN THE SIDE AIR BAG IS ACTIVATED IN THE SIDE COLLISION:

1. Replace the following components:

- All parts of front seatback (including front seatback frame) with front side air bag module (on the side on which front side air bag is activated)
- Curtain air bag module (on the side on which side curtain air bag is activated)
- Diagnosis sensor unit
- Satellite sensor (on the side on which side air bag and side curtain air bag is activated)

2. Check the SRS components and the related parts using the following table.

- Replace any SRS components and the related parts showing visible signs of damage (dents, cracks, deformation).

3. Conduct self-diagnosis using CONSULT-II or “AIR BAG” warning lamp. Refer to SRS-21, "SRS Operation Check" . Ensure entire SRS operates properly.

WHEN SRS IS NOT ACTIVATED IN THE SIDE COLLISION:

1. Check the SRS components and the related parts using the following table.

- Replace any SRS components and the related parts showing visible signs of damage (dents, cracks, deformation).

2. Conduct self-diagnosis using CONSULT-II or “AIR BAG” warning lamp. Refer to SRS-21, "SRS Operation Check" . Ensure entire SRS operates properly.

SRS INSPECTION (FOR SIDE COLLISION)

Part	Front side air bag and side curtain air bag is activated	Front side air bag and side curtain air bag is NOT activated
(LH or RH) side curtain air bag module	Replace the side curtain air bag module. (Repair the center pillar inner, etc. before installing new one if damaged.)	1. Check for visible signs of damage (dents, tears, deformation) of the center pillar on the collision side. 2. If damaged— Remove the side curtain air bag module. 3. Check for visible signs of damaged (tears etc.) of the side curtain air bag module. 4. Check harness and connectors for damage, and terminals for deformities. 5. If no damage is found, reinstall the side curtain air bag module with new bolts. 6. If damaged—REPLACE the side curtain air bag module with new bolts. Air bag must be deployed before disposal.
Front (LH or RH) side air bag module	REPLACE all parts of seatback with deployed front side air bag module.	1. Check for visible signs of damage (dents, tears, deformation) of the seatback on the collision side. 2. Check harness and connectors for damage, and terminals for deformities. 3. If damaged—REPLACE the front seatback assembly. Air bag must be deployed before disposal.
(LH or RH) side air bag (Satellite) sensor	REPLACE the side air bag (Satellite) sensor on the collision side with new nuts. (Repair the center pillar inner, etc. before installing new one if damaged.)	1. Remove the side air bag (Satellite) sensor on the collision side. Check harness connectors for damage, terminals for deformities, and harness for binding. 2. Check for visible signs of damage (dents, cracks, deformation) of the side air bag (Satellite) sensor. 3. Install the side air bag (Satellite) sensor to check fit. 4. If no damage is found, reinstall the side sir bag (Satellite) sensor with new nuts. 5. If damaged—REPLACE the side air bag (Satellite) sensor with new nuts.
Diagnosis sensor unit	REPLACE the diagnosis sensor unit with the new bolts.	1. Check case and bracket for dents, cracks or deformities. 2. Check connectors for damage, and terminals for deformities. 3. If no damage is found, reinstall the diagnosis sensor unit with new bolts and ground bolt. 4. If damaged—REPLACE the diagnosis sensor unit with new bolts and ground bolt.

Part	Front side air bag and side curtain air bag is activated	Front side air bag and side curtain air bag is NOT activated
Seat belt pre-tensioner assembly	1. Check if the seat belt can be extended smoothly. If the seat belt cannot be extended smoothly, – Check for deformities of the center pillar inner. – If the center pillar inner has no damage, REPLACE the seat belt pre-tensioner assembly. 2. Remove the seat belt pre-tensioner assembly on the collision side. Check harness cover and connectors for damage, terminals for deformities, and harness for binding. 3. Check for visible signs of damage (dents, cracks, deformation) of the seat belt pre-tensioner assembly. 4. Check seat belt adjuster for damage. 5. If no damage is found, reinstall the seat belt pre-tensioner assembly. 6. If damaged—REPLACE the seat belt pre-tensioner assembly with new bolts.	
Seat with front side air bag	REPLACE all parts of front seatback (including front seatback frame)	1. Visually check the seat on the collision side. 2. Remove the seat on the collision side and check the following for damage and deformities. – Harness, connectors and terminals – Frame and recliner (for front and rear seat), and also adjuster and slides (for front seat) 3. If no damage is found, reinstall the seat. 4. If damaged—REPLACE the damaged seat parts using new bolts.
Center inner pillar	1. Check the center inner pillar on the collision side for damage (dents, cracks, deformation). 2. If damaged—REPAIR the center inner pillar.	
Trim/headlining	1. Check for visible signs of damage (dents, cracks, deformation) of the interior trim on the collision side. 2. If damaged—REPLACE the damaged trim parts.	

nagelec.ir

nasicoelec.ir